www.reelschematic.com

FURUNO

INSTALLATION MANUAL

MARINE RADAR

MODEL FAR-2157(-BB)

FURUNO ELECTRIC CO., LTD.
NISHINOMIYA, JAPAN

PRINTED IN JAPAN

www.reelschematic.com

ECF
(Elemental Chlorine Free)
The paper used in this manual
is elemental chlorine free.

© FURUNO ELECTRIC CO., LTD.

9-52 Ashihara-cho,
Nishinomiya 662-8580, JAPAN

Telephone : 0798-65-2111
Fax : 0798-65-4200

FURUNO Authorized Distributor/Dealer

All rights reserved.

Printed in Japan

FIRST EDITION : FEB. 2007

Pub. No. IME-35220-A

(DAMI) FAR-2157/BB

00014869200

www.reelschematic.com

SAFETY INSTRUCTIONS

The installer must read and follow all the safety instructions before attempting to install the equipment.

WARNING	Indicates a potentially hazardous situation which, if not avoided, could result in death or serious injury.
CAUTION	Indicates a potentially hazardous situation which, if not avoided, may result in minor or moderate injury.

Warning, Caution Prohibitive Action Mandatory Action

WARNING

Radio Frequency Radiation Hazard

The radar antenna emits electromagnetic radio frequency (RF) energy which can be harmful, particularly to your eyes. Never look directly into the antenna aperture from a close distance while the radar is in operation or expose yourself to the transmitting antenna at a close distance.

Distances at which RF radiation levels of 100 W/m^2 and 10 W/m^2 exist are given in the table below.

Note: If the antenna unit is installed at a close distance in front of the wheel house, it may be necessary to halt transmission within a certain sector of antenna revolution. This can be done from the SCANNER menu.

Radiator type	Distance to 100 W/m^2 point	Distance to 10 W/m^2 point
XN4A	1.20 m	13.60 m
XN5A	1.10 m	12.30 m

www.reelschematic.com

⚠ WARNING

Do not open the equipment unless totally familiar with electrical circuits and service manual.

Only qualified personnel should work inside the equipment.

Wear a hard hat and safety belt when mounting the antenna unit.

Serious injury or death can result if someone falls from the radar antenna mast.

Construct a suitable service platform from which to install the antenna unit.

Serious injury or death can result if someone falls from the radar antenna mast.

Do not install units other than the antenna unit in a place subject to rain or water splash.

Fire, electrical shock or injury can result if water leaks into those units.

Turn off the power at the switchboard before beginning the installation.

Fire, electrical shock or injury can result if the power is on during the installation.

Use only the specified power cables.

Use of power cables that are thinner than those specified can cause fire.

Securely attach protective earth to the ship's body.

The protective earth is required to prevent electrical shock.

⚠ CAUTION

A proper license is necessary to install a radar.

See your dealer for details.

Observe the following compass safe distances to prevent interference to a magnetic compass:

	Standard compass	Steering compass
Antenna Unit (50 kw)	3.75 m	2.45 m
Monitor Unit (MU-201CR)	1.55 m	1.00 m
Processor Unit (RPU-013)	1.35 m	0.85 m
Control Unit (RCU-014)	0.30 m	0.30 m
Control Unit (RCU-015)	0.95 m	0.60 m
Control Unit (RCU-016)	0.65 m	0.45 m
Power Supply Unit (PSU-006)	0.30 m	0.30 m
Memory Card Interface Unit (CU-200)	0.90 m	0.60 m
Switching Hub (HUB-100)	1.00 m	0.60 m

www.reelschematic.com

TABLE OF CONTENTS

SYSTEM CONFIGURATION ..... **iv**
EQUIPMENT LISTS ..... **v**

1. MOUNTING **1-1**
1.1 Antenna Unit 1-1
1.2 Monitor Unit (for FAR-2157) 1-7
1.3 Control Unit 1-10
1.4 Processor Unit 1-15
1.5 Power Supply Unit 1-16

2. WIRING **2-1**
2.1 Wiring Overview 2-1
2.2 Antenna Unit 2-2
2.3 Monitor Unit (for FAR-2157) 2-8
2.4 Processor Unit 2-9
2.5 Power Supply Unit 2-14
2.6 Changing AC Power Specification 2-16

3. ADJUSTMENTS **3-1**
3.1 Initializing Tuning 3-1
3.2 Heading Alignment 3-2
3.3 Adjusting Sweep Timing 3-5
3.4 Suppressing Main Bang 3-6
3.5 Other Settings 3-7

4. OPTIONAL EQUIPMENT **4-1**
4.1 Gyro Converter GC-10 4-1
4.2 Memory Card Interface Unit 4-10
4.3 DVI-RGB Conversion Kit 4-13
4.4 BNC Connector Converter 4-16

5. IO DATA **5-1**

PACKING LISTS **A-1**
OUTLINE DRAWINGS **D-1**
INTERCONNECTION DIAGRAM **S-1**

www.reelschematic.com

SYSTEM CONFIGURATION

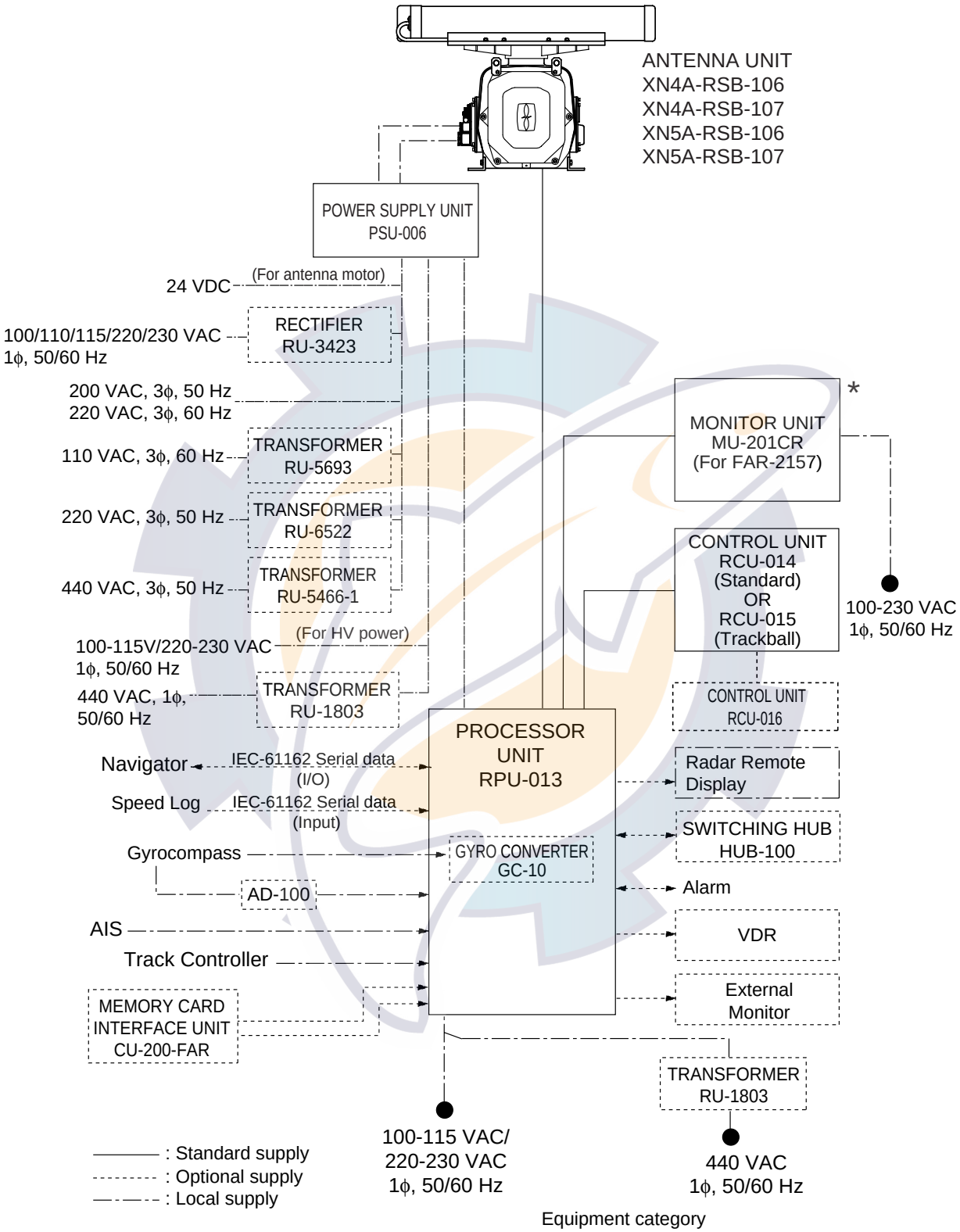

* FAR-2157-BB is not equipped with a monitor unit. Procure one locally.

Equipment category

Unit	Category
Antenna	Exposed to weather
Other units	Protected from weather

www.reelschematic.com

EQUIPMENT LISTS

Standard supply

Name	Type	Code No.	Qty	Remarks
Antenna Unit	XN4A-RSB-106	–	1	200/220 VAC, 2570 mm
	XN4A-RSB-107	–		24 VDC, 2570 mm
	XN5A-RSB-106	–		200/220 VAC, 3210 mm
	XN5A-RSB-107	–		24 VDC, 3210 mm
Power Supply Unit	PSU-006	–	1	
Monitor Unit	MU-201CR	–	1	For FAR-2157
Processor Unit	RPU-013	–	1	
Control Unit	RCU-014	–	1	Standard type
	RCU-015	–		Trackball type
Installation Materials*	CP03-31301	008-572-970	1	For antenna unit
	CP03-25700	000-080-435	1	15 m signal cable (RW-9600)
	CP03-25710	000-080-436		30 m signal cable (RW-9600)
	CP03-25730	000-082-191		40 m signal cable (RW-9600)
	CP03-25720	000-080-437		50 m signal cable (RW-9600)
	CP03-25800	000-080-434	1	Cable assy. for monitor unit
	CP03-25602	008-535-940	1	For processor unit
	CP03-31401	008-572-750	1	For power supply unit
	CP03-25604	008-539-850	1	For control unit
Accessories*	FP03-09810	008-536-010	1	For monitor unit
	FP03-09850	008-535-610	1	For standard-type control unit
	FP03-09860	008-535-690		For trackball-type control unit
Spare Parts*	SP03-14404	008-535-910	1	For processor unit, 100 VAC
	SP03-14405	008-535-920		For processor unit, 220 VAC
	SP03-09203	008-424-380	1	For 24 VDC antenna unit
	SP03-14401	008-535-990	1	For FAR-2157's monitor unit
	SP03-15501	008-572-730	1	For power supply unit, 100 VAC
	SP03-15501	008-572-740		For power supply unit, 220 VAC

* See packing list at end of this manual.

www.reelschematic.com

Optional equipment

Name	Type	Code No.	Remarks
Gyro Converter	GC-10-2	000-080-440	See Chapter 4.
Rectifier Unit	RU-3423	–	100/110/115/220/230 VAC to 24 DC, for power supply unit
Stepdown Transformer Unit	RU-1803	–	440 to 100 VAC, for processor unit
	RU-5693	–	110 to 220 VAC, 3ϕ, for antenna unit
	RU-6522	–	220 to 200 VAC, 3ϕ, for antenna unit
	RU-5466-1	–	440 to 200 VAC, 3ϕ, for antenna unit
Memory Card Interface Unit	CU-200-FAR	000-081-568	w/CP03-27430, see Chapter 4.
External Alarm Buzzer	OP03-21	000-030-097	
Control Unit	RCU-016	000-080-299	Remote type, w/FP03-09860
RAM Card	O0RAM08MC-005	004-376-740	8MB
DVI-RGB Converter Kit	OP03-180-1	008-545-590	For installation in the field.
	OP03-180-2	008-536-070	For installation in field. See Ch. 4.
Cable Assy.	XH10P-W-6P L=20M	000-149-748	Processor unit↔Control unit, 20 m
	XH10P-W-6P L=30M	000-149-749	Processor unit↔Control unit, 30 m
	XH10P-W-5P-A L=10M	000-149-050	Between control units, 10 m
	XH10P-W-5P-A L=20M	000-149-051	Between control units, 20 m
	XH10P-W-5P-A L=30M	000-149-052	Between control units, 30 m
	DVI-D/D S-LINK 10M	000-150-200	Processor unit↔Control unit, 10 m
	S03-9-5(8-8P)	008-206-640	External radar, 5 m, 8-8P
	S03-9-10(8-8P)	008-206-650	External radar, 10 m, 8-8P
	S03-9-15(8-8P)	008-209-160	External radar, 15 m, 8-8P
Installation Materials (Armored LAN-Cable Kit)	CP03-28900	000-082-658	FR-FTPC-CY 10 m, modular connector MPS588-C, 2 pcs.
	CP03-28910	000-082-659	FR-FTPC-CY 20 m, modular connector MPS588-C, 2 pcs.
	CP03-28920	000-082-660	FR-FTPC-CY 30 m, modular connector MPS588-C, 2 pcs.
Bracket Assy.	FP03-09820	008-535-560	Hanger assy. for monitor unit
Handgrip Assy.	FP03-09840	008-535-570	For monitor unit
Dust Cover	03-163-1201	100-307-260	For monitor unit
Clamp Assy.	OP03-182	008-535-620	For RCU-014
Flush Mount Kit	FP03-09870	008-535-630	For control unit
	OP03-198	001-008-050	
Connection Stand	OP03-183	008-535-640	RCU-014↔MU-201CR
	OP03-185	008-535-660	RCU-014
Hanger Kit	FP03-10201	008-539-530	Desktop inst. kit for CU-200-FAR
BNC Connector Converter	DSUB-BNC-1	000-148-528	For connecting VDR
Switching Hub	HUB-100	–	See Operator's Manual for HUB-100, issued separately.

www.reelschematic.com

1. MOUNTING

1.1 Antenna Unit

Mounting considerations

The antenna unit is generally installed either on top of the wheelhouse, on the radar mast, or on a suitable platform. The mounting location should afford a good all-round view and satisfy the siting and mounting considerations mentioned below.

Siting

- No funnel, mast or derrick should be within the vertical beamwidth of the antenna unit in the bow direction, especially zero degrees ±5°, to prevent blind sectors and false echoes on the radar picture.
- Deposits and fumes from a funnel or other exhaust vent can adversely affect the aerial performance and hot gases may deform the radiator. The antenna unit must not be mounted where the temperature is more than 70°C.
- Locate a direction finder antenna clear of the antenna unit to prevent interference to the direction finder. A separation of more than two meters is recommended.
- Choose a location where reflections from the radar reflector will not be received by the radar antenna.
- The "standard" antenna unit orientation has the cable glands directed toward the bow.
- Leave sufficient space around the unit for maintenance and servicing. See the antenna unit outline drawing for recommended maintenance space.

Mounting

- Use rope and crane to hoist the antenna unit to the mounting location. Lifting fixtures are provided on the antenna chassis to which to fasten rope.
- Mount the unit parallel to the waterline.
- A hole is required in the mounting platform for the antenna cable.
- An appropriate platform should be constructed at the mounting location to facilitate installation and maintenance work.
- Connect ground wire between antenna terminal on antenna chassis and ground point.
- If the mounting platform is made of steel paint it to prevent electrolytic corrosion. DO NOT paint the antenna radiator.

www.reelschematic.com

Assembling the antenna unit

The antenna unit should be assembled before mounting it. Follow the procedure below to assemble the antenna unit. The numbers in parentheses refer to the parts numbers shown in the illustration on the next page.

1. Grease the O-ring(1) and set it to the O-ring groove in the flange on the rotation coupler on the antenna base. Fasten the feeder waveguide to the antenna base with hex bolts B(2). Coat the surface of the waveguide flange with silicon rubber, referring to the illustration below for instructions.
2. Loosely fasten the antenna radiator to the antenna base with hex bolts(3) and(6), flat washers(5) and (7), spring washers(4) and (8) and hex nut(9).
3. Grease the O-ring(1) for the antenna radiator and set it to the O-ring groove on the feeder waveguide flange on the antenna radiator. Fasten the feeder waveguide to the antenna radiator with hex head bolts(2).
4. Fasten the waveguide clamp(13) to the waveguide clamp insulator(14) with hex head bolt(10), flat washer(12) and spring washer(11).
5. Securely fasten the antenna radiator to the antenna base.

How to coat waveguide flange with silicon rubber

(1) Do not let sealant contact O-ring groove.
(2) Evenly coat flange with silicon rubber at the locations shown below.
Use enough silicon rubber so that it oozes out when fastening bolts. Wipe off surplus. Be sure silicon rubber does not contact choke guide or feeder waveguide.

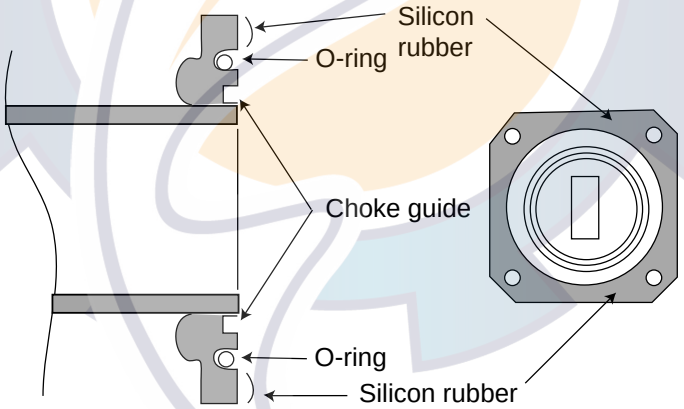

Note: The surface to be coated with silicon rubber should be cleaned beforehand to remove foreign material or silicon rubber previously applied.

How to coat waveguide flange with silicon rubber

www.reelschematic.com

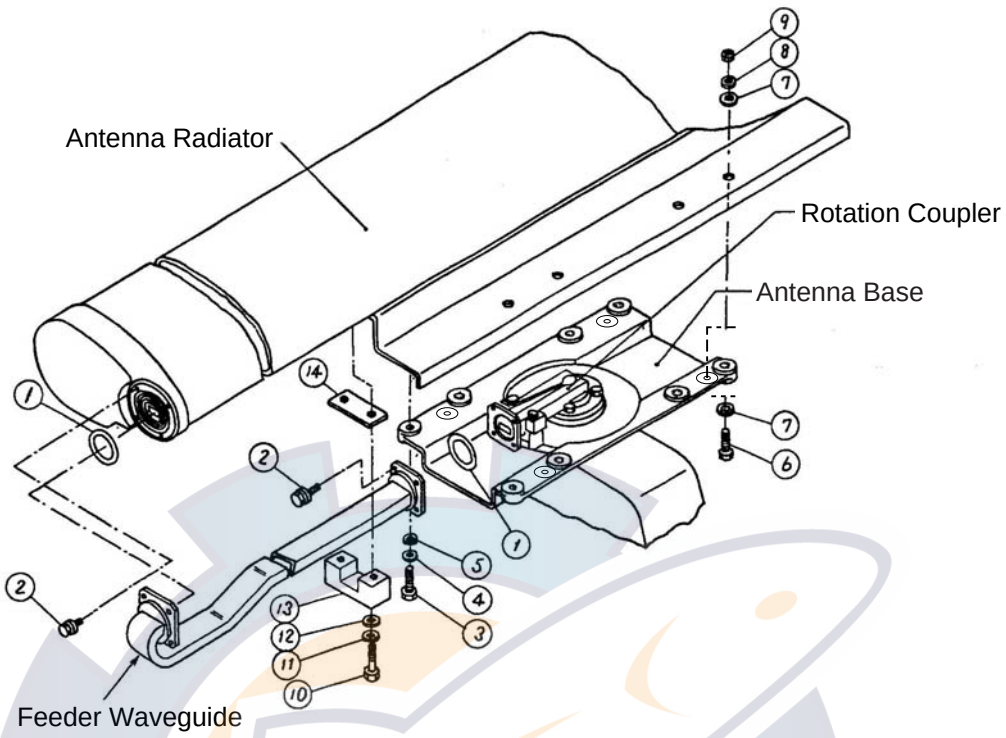

Parts of antenna unit XN4A/XN5A

List of parts for assembling antenna unit

No.	Name	Type	Qty
1	O-ring	AS568-125	2
2	Hex Bolt B	M4×16 (SUS304)	8
3	Hex Bolt	Antenna unit XN4A: M8×25 (SUS304)	4
		Antenna unit XN5A: M8×35 (SUS304)	
4	Spring Washer	M8 (SUS304)	4
5	Flat Washer	M8 (SUS304)	4
6	Hex Bolt	M8×30 (SUS304)	4
7	Flat Washer	M8 (SUS304)	8
8	Spring Washer	M8 (SUS304)	4
9	Hex Nut	M8 (SUS304)	4
10	Hex Bolt	M4×30 (SUS304)	2
11	Spring Washer	M4 (SUS304)	2
12	Flat Washer	M4 (SUS304)	2
13	Waveguide Clamp	RSB-2006-2	1
14	Waveguide Clamp Insulator	03-003-4003-0	1
	Chemiseal	S-8400W, aluminum tube, 50g	1

www.reelschematic.com

How to hoist antenna unit

1. Referring to the illustration below, fasten rope A of approx. 85 cm in length and fasten rope B of approx. 100 cm in length.
2. Place protective material (cardboard, foam, etc.) between rope and radiator at the asterisk-marked locations shown below, to prevent damage to the radiator.
3. Hoist the antenna slightly and confirm that the load applied to the radiator is not excessive. (If load is excessive, lower the antenna unit and adjust lengths of ropes.)
4. Hoist the antenna unit to the mounting location.

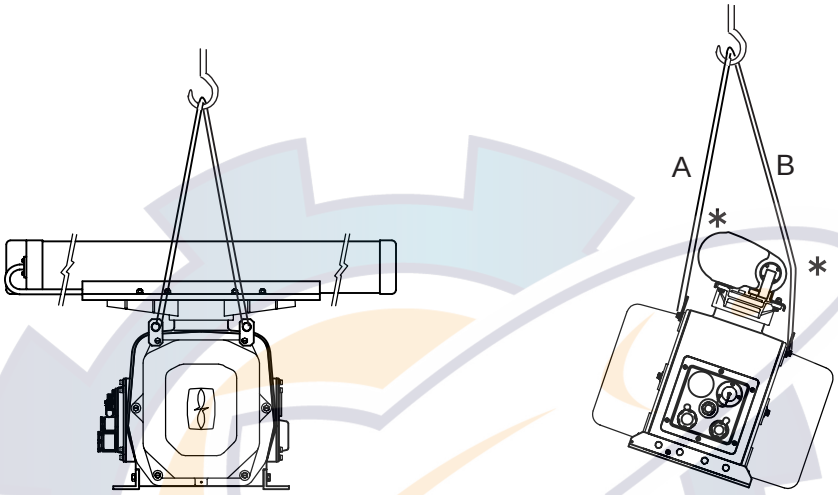

How to attach hoisting ropes to antenna unit

www.reelschematic.com

Fastening antenna unit to the mounting platform

⚠ WARNING

Do not open the equipment unless totally familiar with electrical circuits and service manual.

Only qualified personnel should work inside the equipment.

Wear a hard hat and safety belt when mounting the antenna unit.

Serious injury or death can result if someone falls from the radar antenna mast.

Construct a suitable service platform from which to install the antenna unit.

Serious injury or death can result if someone falls from the radar antenna mast.

Note: The antenna unit is made of cast aluminum, which is subject to electrolytic corrosion if the mounting platform is steel or iron. To prevent electrolytic corrosion, use the supplied seal washers and corrosion-proof rubber mat.

Fix the antenna unit to the mounting location, referring to the procedure below and the illustration on the next page.

1. Referring to the antenna unit outline drawing, prepare a mounting platform at the mounting location for the antenna unit.
2. Lay the corrosion-proof rubber mat (supplied) on the mounting platform, aligning the holes on the rubber mat with the fixing holes on the mounting platform.
3. Lay the antenna unit on the rubber mat, orienting it so the cable gland is directed toward ship's bow.
4. Use hex bolts (M12×60), nuts, flat washers and seal washers to fix the antenna unit to the mounting platform.
5. Arrange the ground point at a location on the mounting platform that is within 300 mm from the ground terminal on the antenna unit. Fasten the ground wire (RW-4747, 340 mm) there, using the M6×25 hex bolt, nut and washers.
6. Connect the other end of the ground wire to the ground terminal on the antenna unit.
7. Coat the ground terminal, ground point on the mounting platform and fixing bolts on the antenna unit with anticorrosive sealant (supplied).

www.reelschematic.com

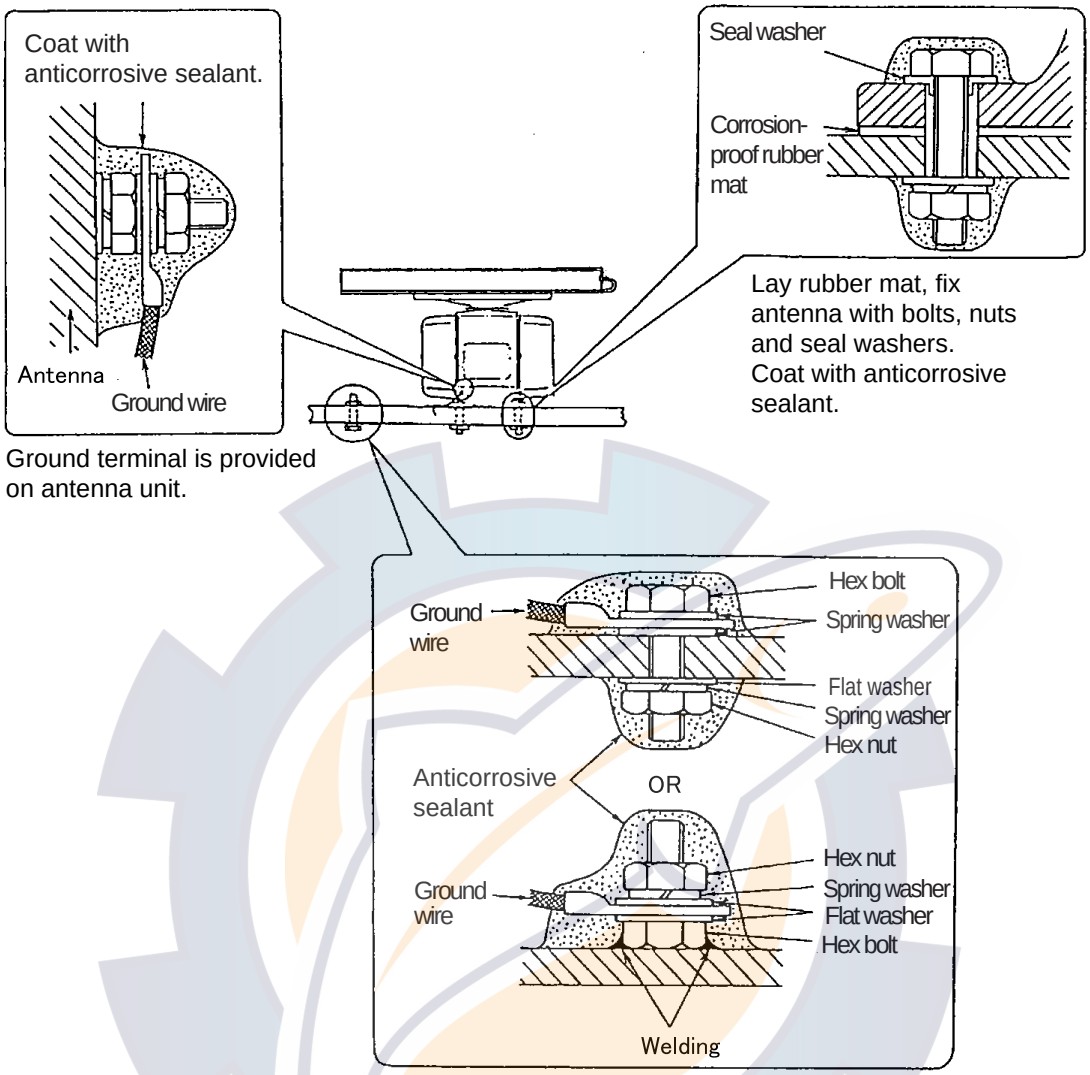

How to mount the antenna unit

www.reelschematic.com

1.2 Monitor Unit (for FAR-2157)

The monitor unit is can flush mounted in a panel or mounted on a desktop (requires optional accessories).

The FAR-2157-BB is not equipped with a monitor unit. Procure a suitable monitor unit locally. Recommended monitor: SXGA (1280×1024), aspect ratio 5:4.

Mounting considerations

When selecting a mounting location, keep in mind the following points:

- Select a location where the screen can be viewed conveniently while facing the bow.
- Locate the unit out of direct sunlight and away from heat sources because of heat that can build up inside the cabinet.
- Locate the unit away from places subject to water splash and rain.
- Leave sufficient space on the sides and rear of the unit to facilitate maintenance, referring to the outline drawing for maintenance space.
- The monitor unit will give interference to a magnetic compass if it is placed too close to the compass. Observe the compass safe distances on page ii to prevent interference to the compass.

Mounting procedure

Flush mounting

Follow the procedure below to mount the monitor unit in a console.

1. Make a cutout in the mounting location referring to the outline drawing shown below.
2. Set the monitor unit to the hole and fix it with four self-tapping screws (6×30).
3. Attach panel hooks near the fixing holes (upper part). See next page. These are used to pull out the monitor unit from the panel for servicing.
4. Attach four panel covers to the fixing holes.

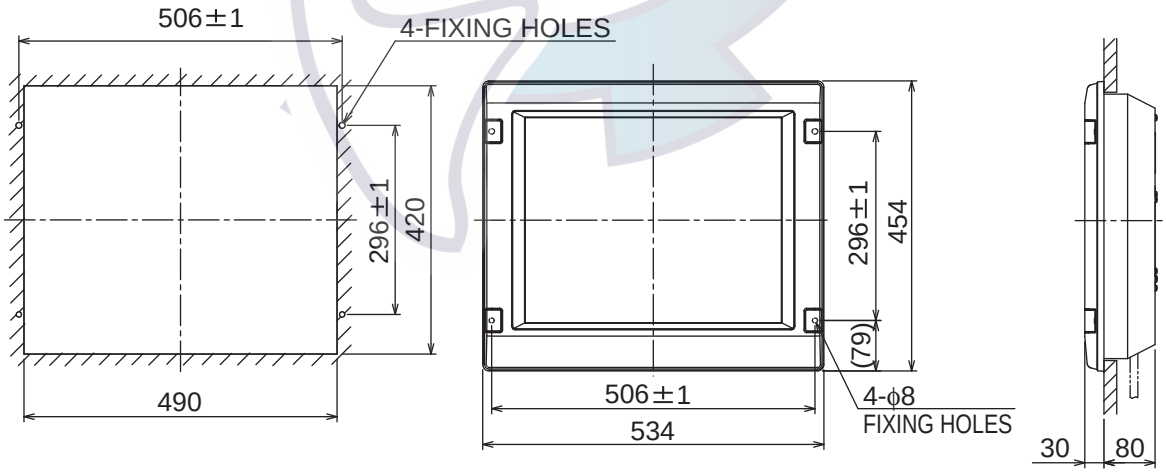

Mounting dimensions for flush mounting the monitor unit

www.reelschematic.com

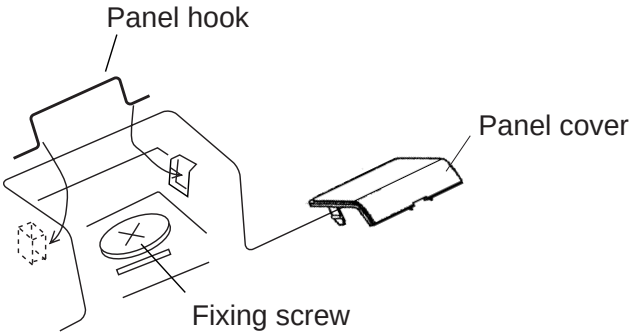

How to attach panel hook and panel cover

Note: If you need to remove the monitor unit from the console, remove the four panel covers with your fingernail and use two panel hooks supplied as accessories to lift the monitor unit.

Desktop mounting

Use the optional desktop mouting kit (Type: FP03-09820, Code No.: 008-535-560) to mount the monitor unit on a desktop.

Contents of desktop mounting kit FP03-09820

Name	Type	Code No.	Qty
Hanger L	03-163-1111	100-305-141	1
Hanger R	03-163-1112	100-305-181	1
Hanger stay	03-163-1113	100-305-191	1
Hole plug	CP-30-HP-13	000-147-143	2
Snap button	KB-13, Black	000-570-276-10	4
Hex. bolt	M6×25	000-162-949-10	4
Hex. bolt	M10×30	000-162-884-10	2
Spring washer	M10	000-864-261	2
Flat washer	M10	000-864-131	2

1. Assemble two hangers and hanger stay with two hex bolts (M10×30), flat washers and spring washers and cover each hex bolt with hole plug.
2. Fix the above assembly to the mounting location with four hex bolts (M12, dockyard supply).
3. Fasten the monitor unit to the mounting hanger assembly with four hex bolts (M6×25, supplied).
4. Cover each hex bolt with a panel cover (4 pcs.).
5. Cover fixing holes for hand grips with snap buttons (4 pcs).

www.reelschematic.com

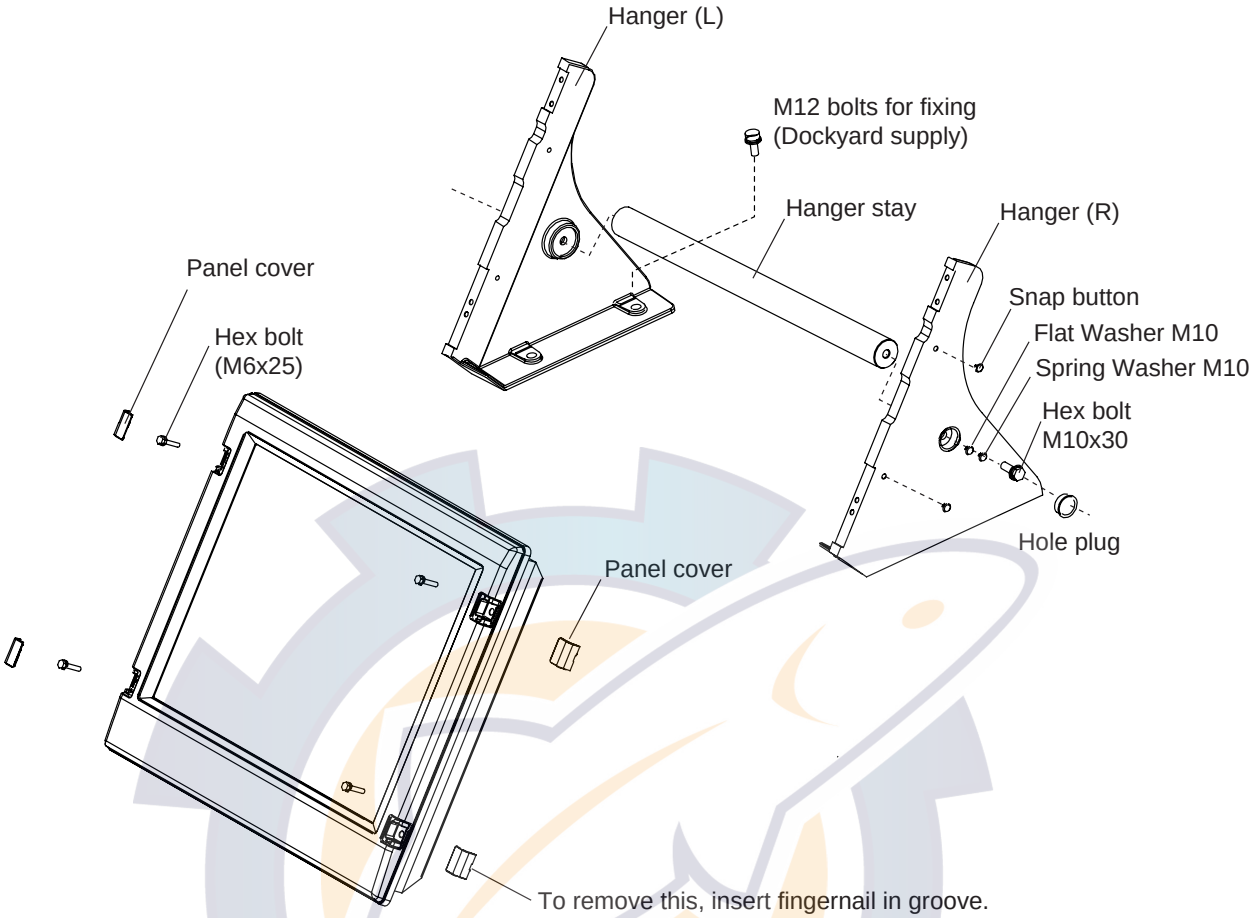

Fastening monitor unit to hanger

Attaching hand grips

Hand grips are optionally available for the desktop-mount monitor unit. Attach them as follows:

1. Remove the snap buttons attached at step 5 on the previous page.
2. Fix hand grips with wave washers, rosette washers and flat head screws.

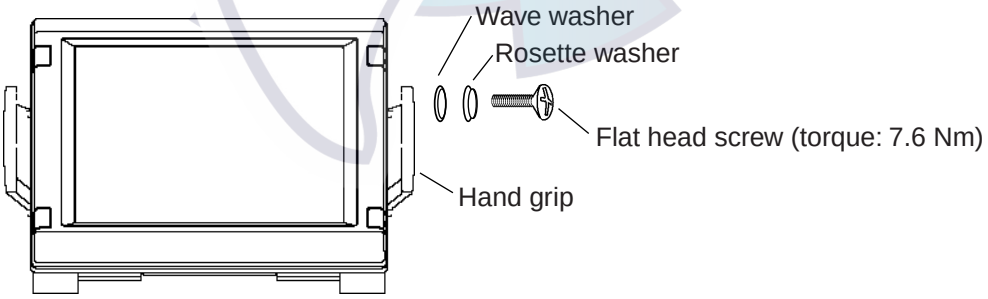

How to attach hand grips

www.reelschematic.com

1.3 Control Unit

Mounting considerations

The control unit may be mounted on a desktop, with or without the KB fixing metal (supplied) which mounts the control unit at an angle. When selecting a mounting location, keep in mind the following points:

- Select a location where the control unit can be operated conveniently while observing the display screen.
- Locate the unit away from heat sources because of heat that can build up inside the cabinet.
- Locate the equipment away from places subject to water splash and rain.
- Determine the mounting location considering the length of the signal cable between the control unit and the processor unit. (A 10 m signal cable is attached to the control unit.)
- A magnetic compass will be affected if the control unit is placed too close to it. Observe the compass safe distances on page ii to prevent interference to a magnetic compass.

Mounting procedure

Fixing with KB (keyboard) fixing plate

The KB fixing plate sits the control unit at a comfortable angle, like the retractable legs on a PC keyboard.

1. Fix the KB fixing plate to the bottom of the control unit.
2. Attach cushions (three for RCU-014, two for RCU-015/RCU-016) to the bottom of the control unit as shown below.
3. Fix the unit to a desired location with self-tapping screws (local supply).

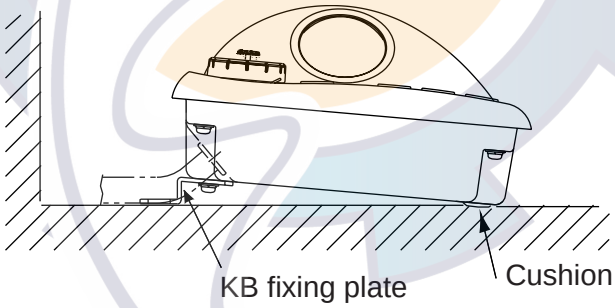

Control unit RCU-014/015/016, side view

www.reelschematic.com

Fixing without KB fixing plate

1. Drill four mounting holes of 5 mm diameter, referring to the outline drawing at the back of this manual.
2. Fix the control unit with four screws (M4) from the under side of the desktop. (M4 screws with a sufficient length for the thickness of the desktop should be provided locally.)

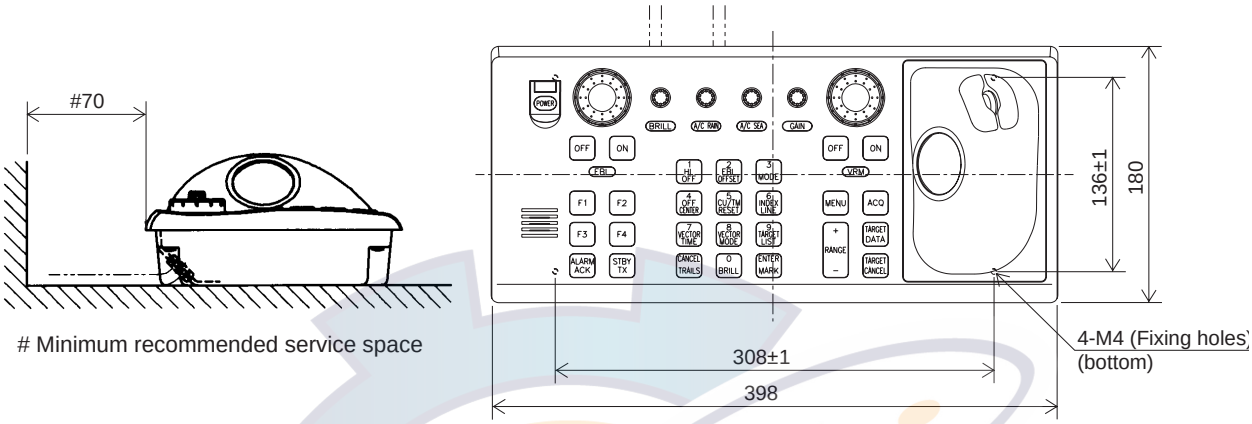

Mounting dimensions for control unit RCU-014

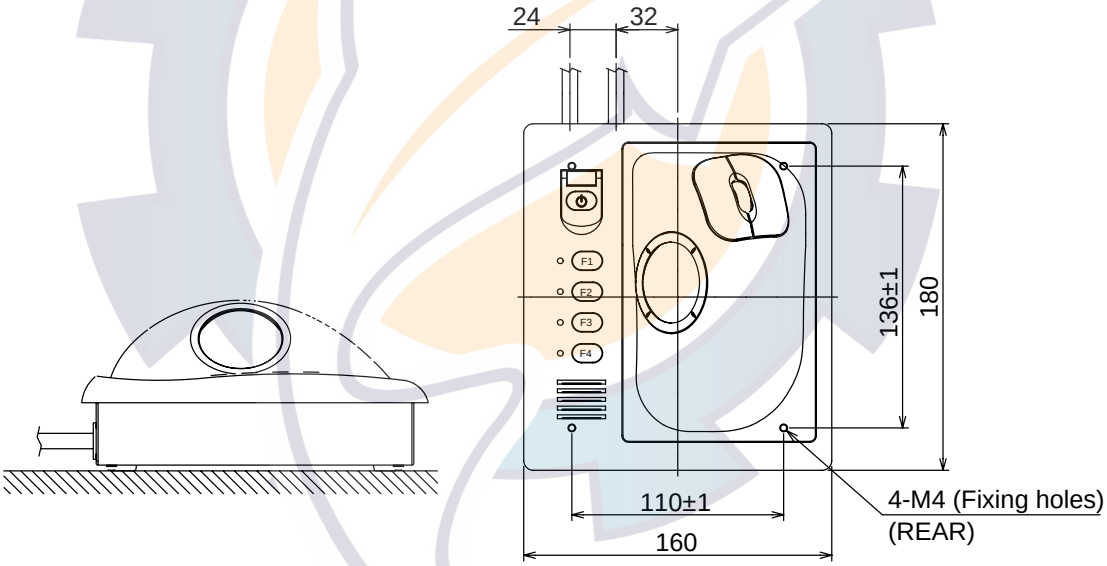

Mounting dimensions for control unit RCU-015/RCU-016

www.reelschematic.com

Flush mounting

Use the optional flush mount kit FP03-09870 (Code No. 008-535-630) to flush mount the control unit RCU-014, RCU-015 and/or RCU016 in a console.

Contents of flush mount kit for RCU-014/015/016

Name	Type	Qty
Mounting plate	03-163-7531	4
Hex bolt	M5	4
Wing screw	M5×40	4
Pan head screw	M4×12	4

1. Prepare a cutout in the mounting location as shown in the figure below.

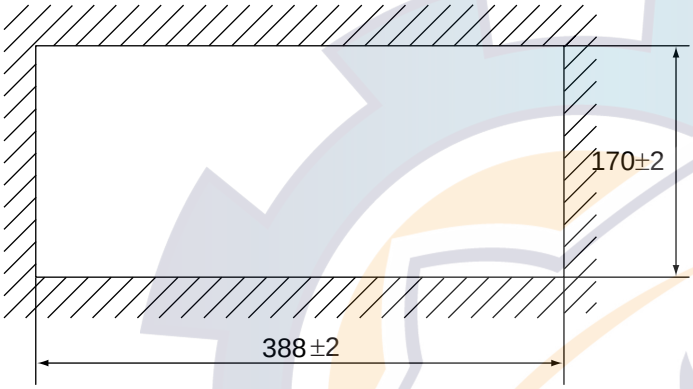

Flush mount cutout for RCU-014

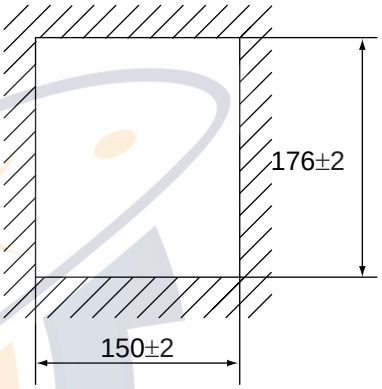

Flush mount cutout for RCU-015 and RCU-016

2. Set the control unit to the cutout.
3. From the rear side, attach the mounting plate to the control unit with four screws.
4. Screw the wing screw to each mounting plate and then insert hex bolt to each wing screw.
5. Fasten each wing screw and then fasten the hex nuts as shown in the figure below.

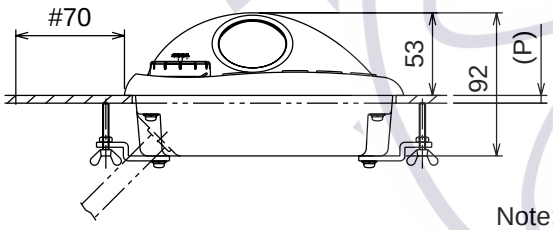

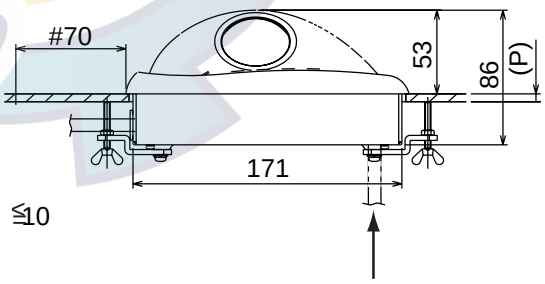

Note: P ≦10

Minimum recommended service space

To change location of cable entrance, see page 1-14.

Flush mount mounting dimensions for control unit RCU-014 (left) and RCU-015/RCU-016

www.reelschematic.com

Connecting RCU-016 in series with RCU-014

1. Pass the cable from RCU-016.

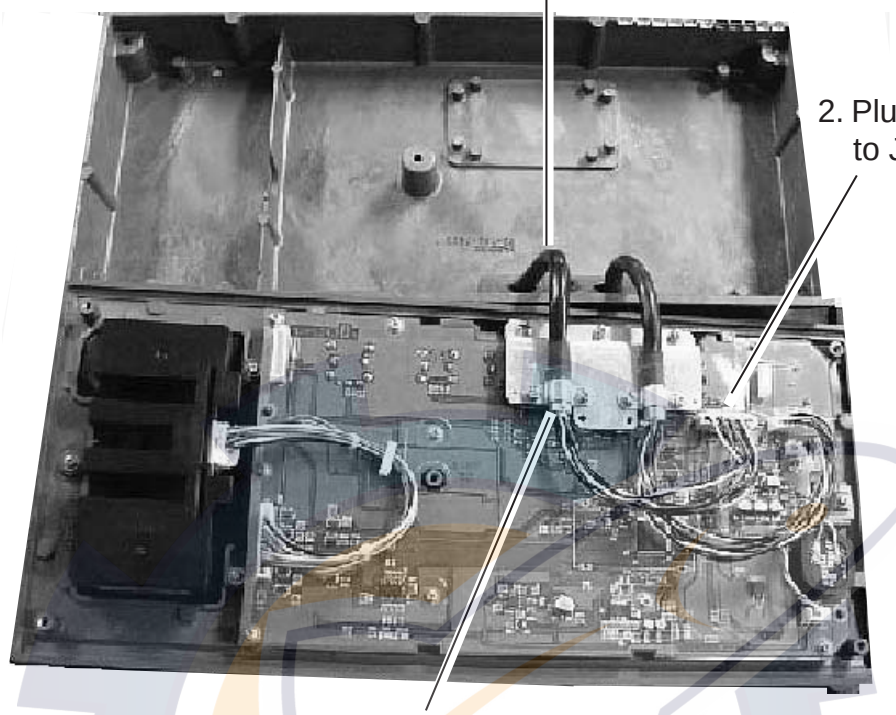

2. Plug in connector to J502.

3. Clamp the copper part of the cable with the cable clamp.

Control unit RCU-014, inside view

www.reelschematic.com

Changing the cable entrance on control unit RCU-015/RCU-016

To change the cable entrance from the side (default) to the bottom, modify the unit as shown below.

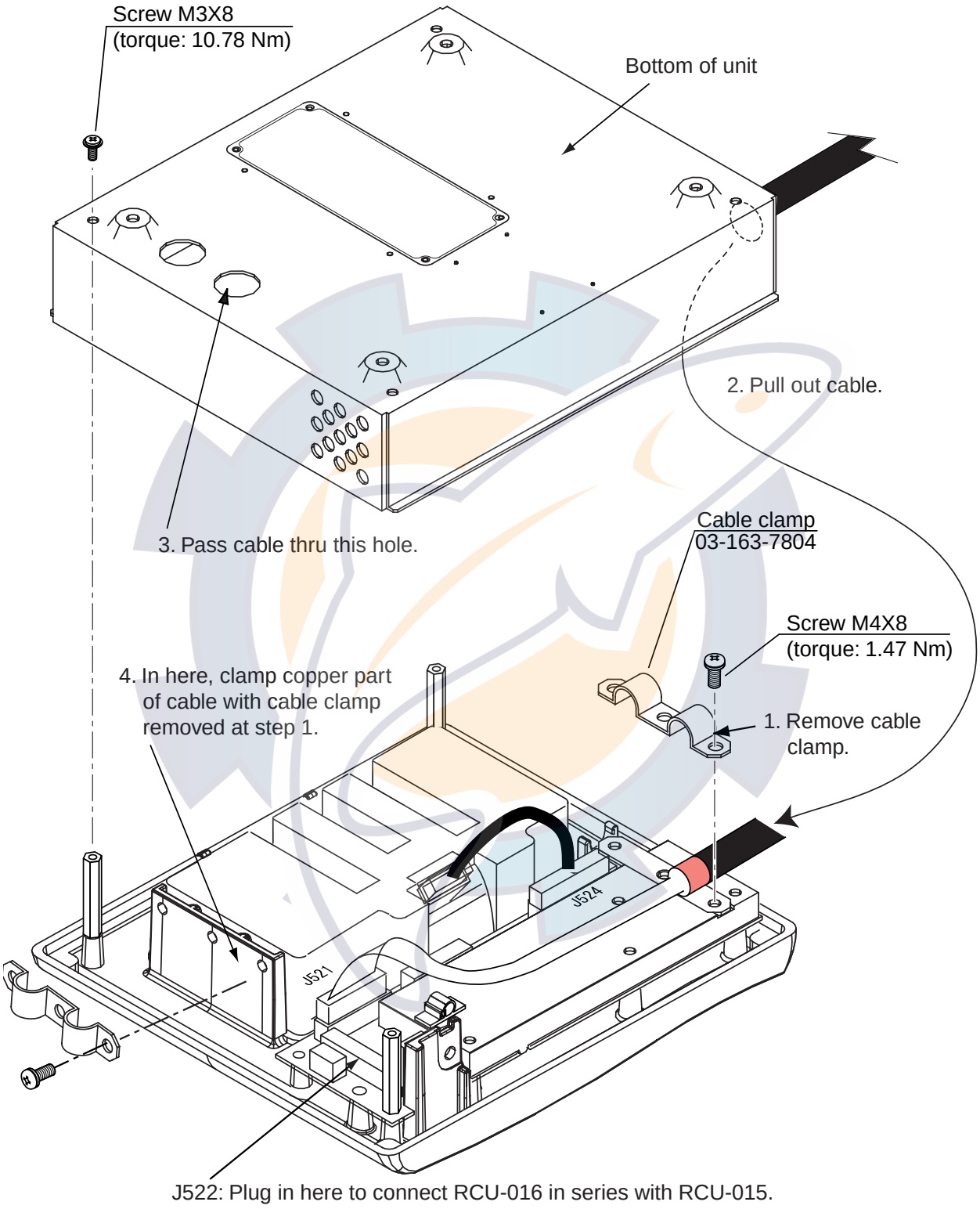

Changing cable entrance on control unit RCU-015/RCU-016

www.reelschematic.com

1.4 Processor Unit

Mounting considerations

When selecting a mounting location, keep in mind the following points:

- Locate the processor unit away from heat sources because of heat that can build up inside the cabinet.
- Locate the unit away from places subject to water splash and rain.
- Leave sufficient space at the sides and rear of the unit to facilitate maintenance, referring to the outline drawing.
- A magnetic compass will be affected if the processor unit is placed too close to it. Observe the compass safe distances on page ii to prevent interference to a magnetic compass.

Mounting procedure

Fix the unit with four M6 bolts or self-tapping screws.

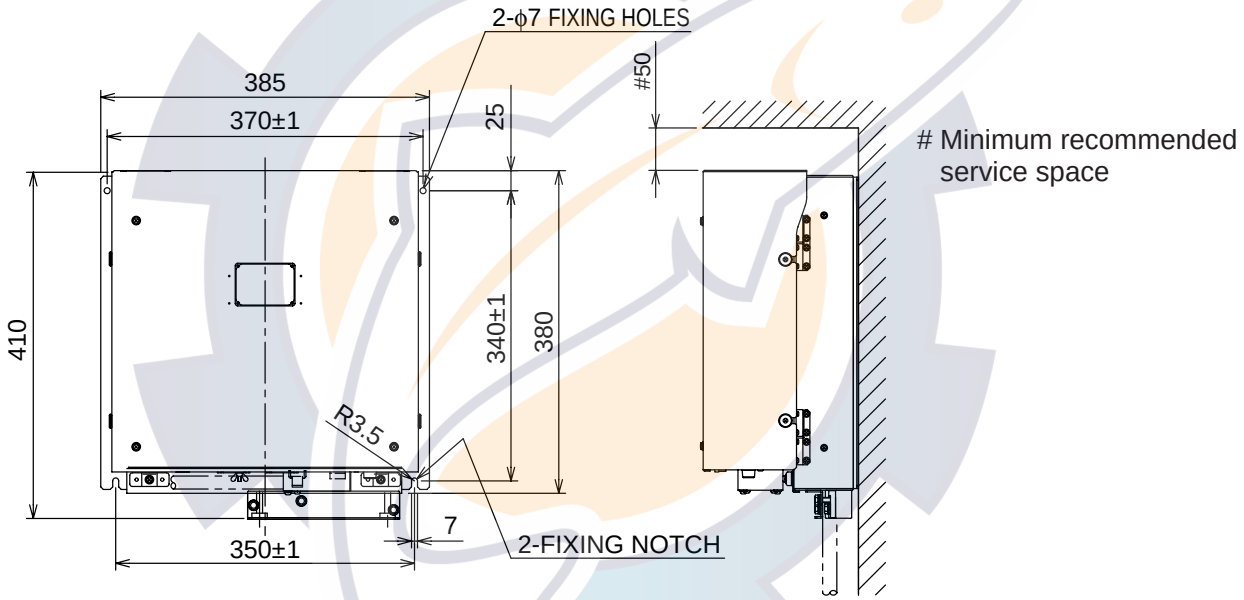

Mounting dimensions for processor unit

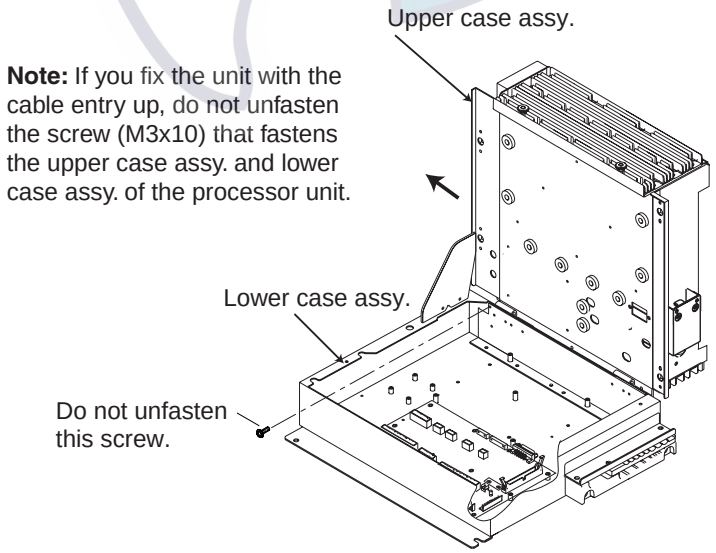

Note: If you fix the unit with the cable entry up, do not unfasten the screw (M3x10) that fastens the upper case assy. and lower case assy. of the processor unit.

www.reelschematic.com

1.5 Power Supply Unit

Mounting considerations

The power supply unit may be mounted on a bulkhead or a deck. Because it has no operation requirements it can be located almost anywhere, provided the location is well ventilated.

Mounting procedure

Fix the unit to the mounting location with four 6×20 self-tapping screws (local supply). For mounting on a bulkhead, do the following:

1. Mark location for mounting holes.
2. Screw in the self-tapping screws at the location for the bottom fixing holes, leaving a gap of about 5 mm between the bottom of the screw head and bulkhead.
3. Set the unit to the screws inserted at step 1.
4. Fasten the self-tapping screws at the top of the unit.
5. Tighten all self-tapping screws.

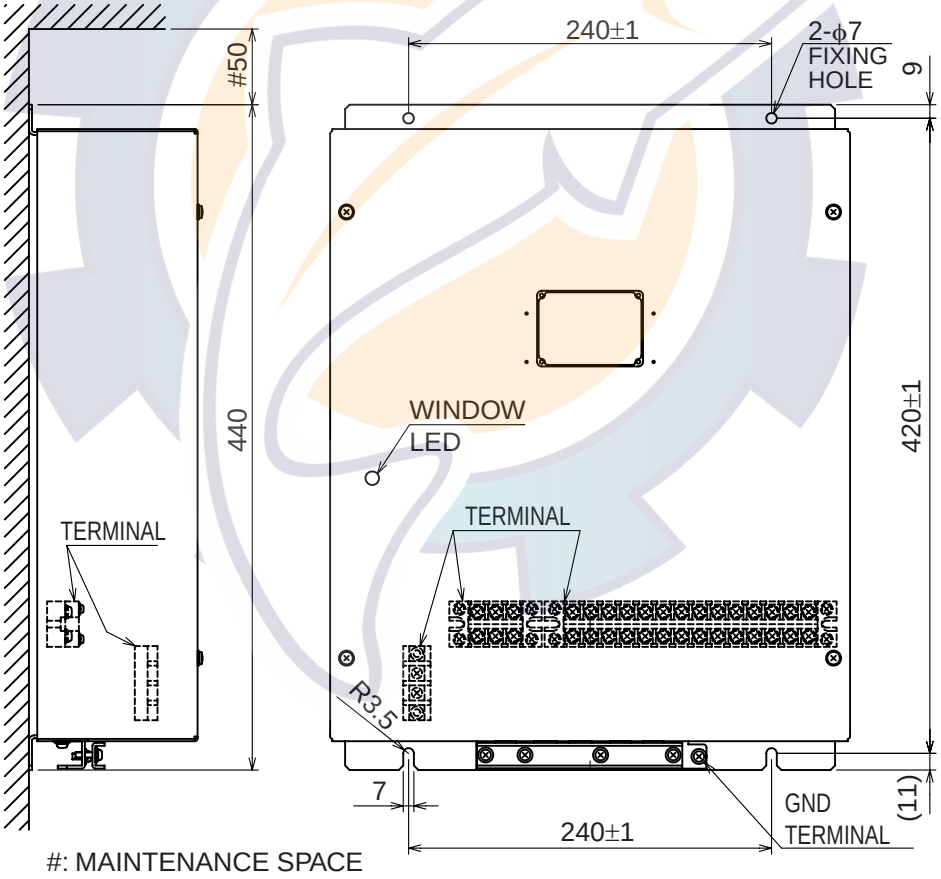

Mounting dimensions for power supply unit

www.reelschematic.com

2. WIRING

2.1 Wiring Overview

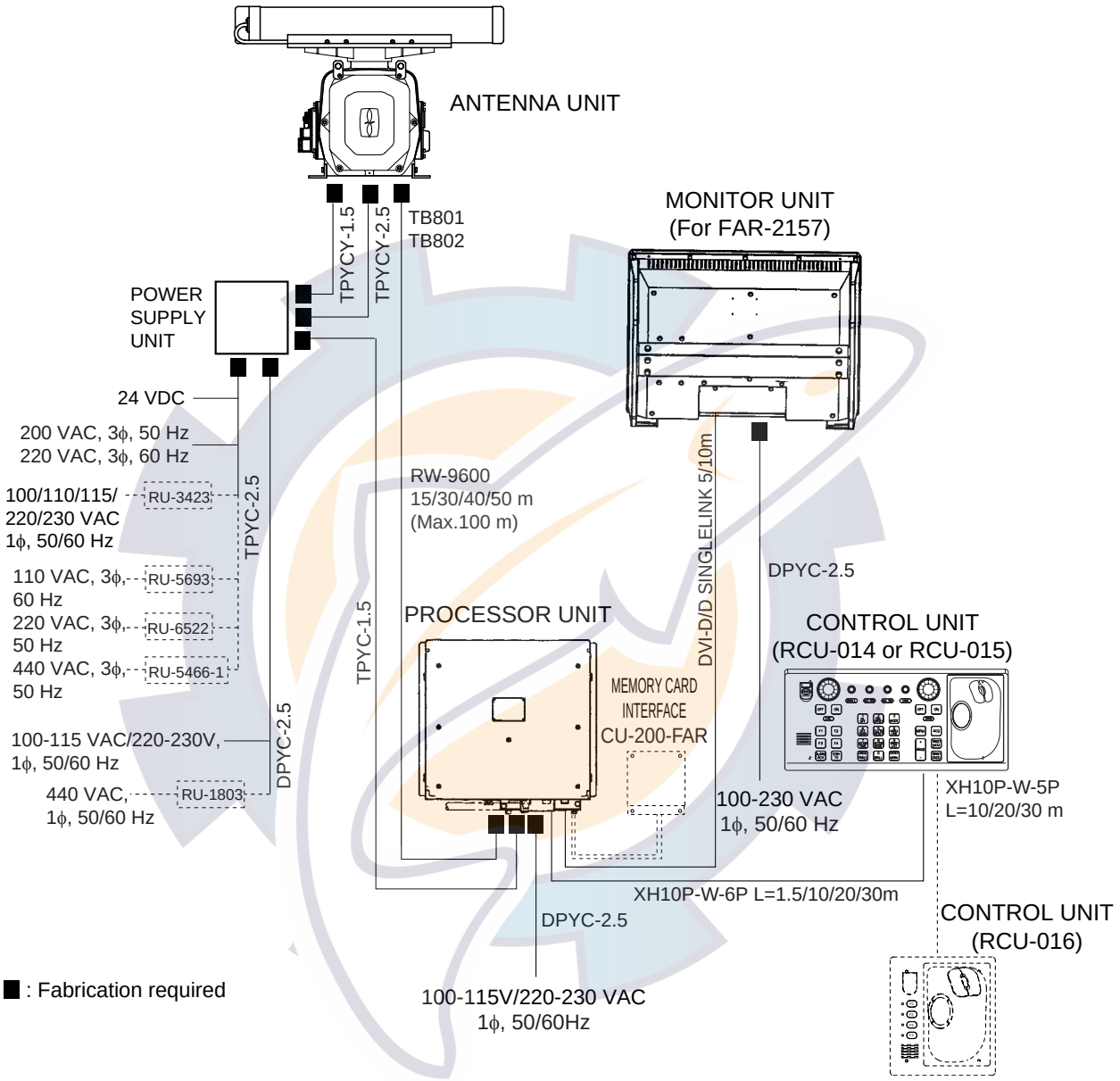

www.reelschematic.com

2.2 Antenna Unit

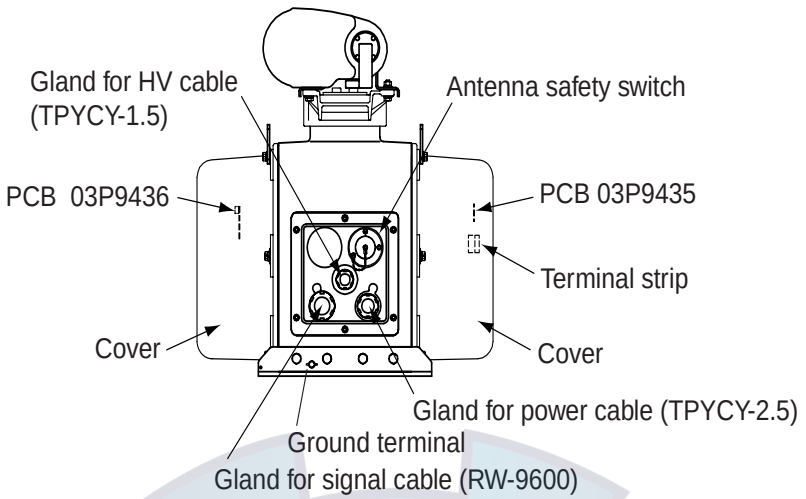

Antenna unit, front view

Fabricating signal cable RW-9600

1. Use a ratchet or box wrench (diagonal 13 mm) to open port- and starboard-side covers on the antenna unit.
2. Unfasten the gland nut for the signal cable and remove the gasket, flat washers (3 pcs.) and gland cap. (The gland cap may be discarded.)
3. Fabricate the signal cable as follows:
   a) Remove the vinyl sheath, armor and sheath by the amounts shown in the figure below.
   b) Unravel the shield to expose cores.
   c) Shorten cores (except coax) considering their locations on the terminal inside the antenna unit.
   d) Shorten the shield, leaving 300 mm. Attach crimp-on-lug (FV5.5-4, yellow, ϕ4) to shield.
   e) Remove the sheath of cores by 6 mm.
   f) Unravel armor.
   g) Fix vinyl wire, coaxial cable and shield by taping the shield with vinyl tape at the location shown below.

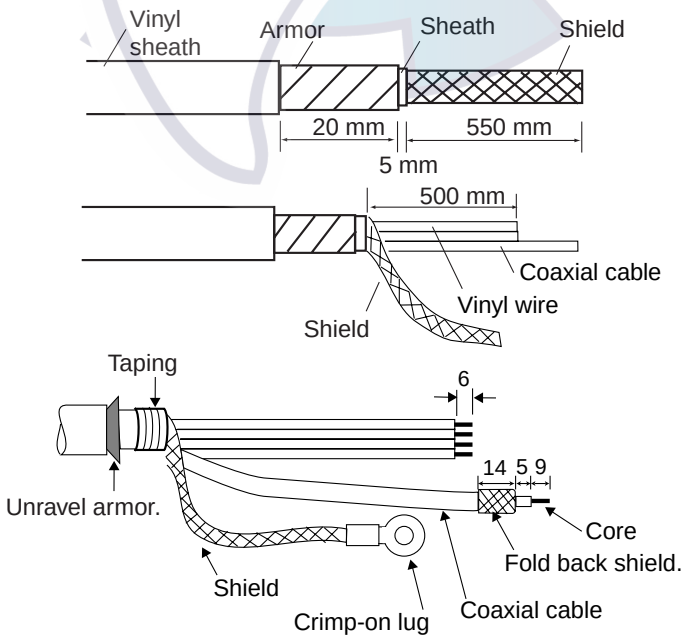

Fabricating signal cable RW-9600

www.reelschematic.com

4. In the order shown in the figure below, pass the gland nut, flat washers (3 pcs.) and gasket onto the signal cable.

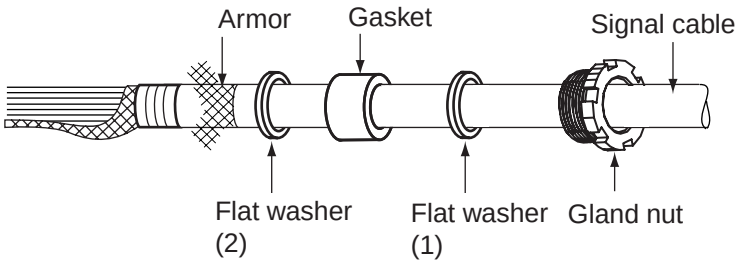

5. As shown in the figure below, fold back the armor onto flat washer (2) and insert remaining armor through flat washer (3). Cut off the part of the armor that protrudes past the flat washers (2) and (3).

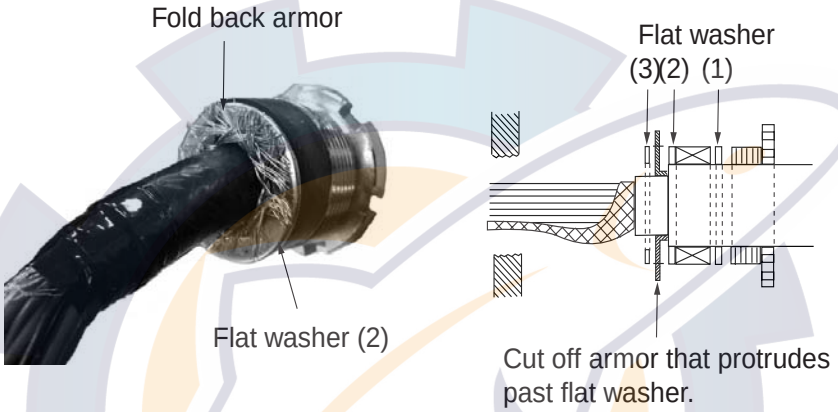

6. Lead the signal cable through its cable gland and then into the chassis. Coat the threaded part of gland nut with sealant (supplied) and then tighten the nut.

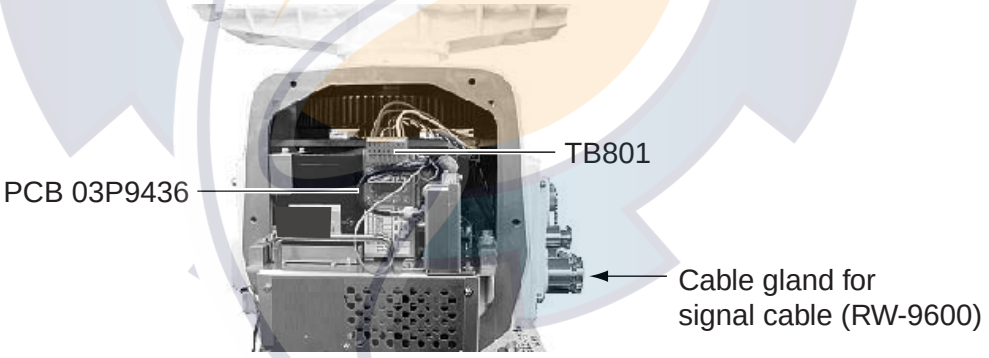

Antenna unit, front view

www.reelschematic.com

7. Using the terminal opener provided, connect cores (except coaxial cable) to their appropriate locations on TB801 on the PCB 03P9436. Refer to the interconnection diagram for wiring details.

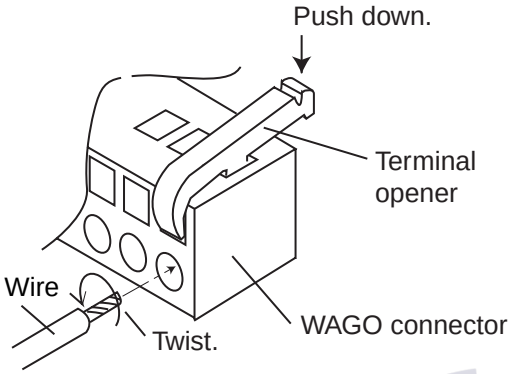

Procedure

1. Twist core.
2. Insert terminal opener as shown and push down.
3. Insert core into hole.
4. Release terminal opener.
5. Tug on wire to confirm that it is firmly in place.

How to wire WAGO connector

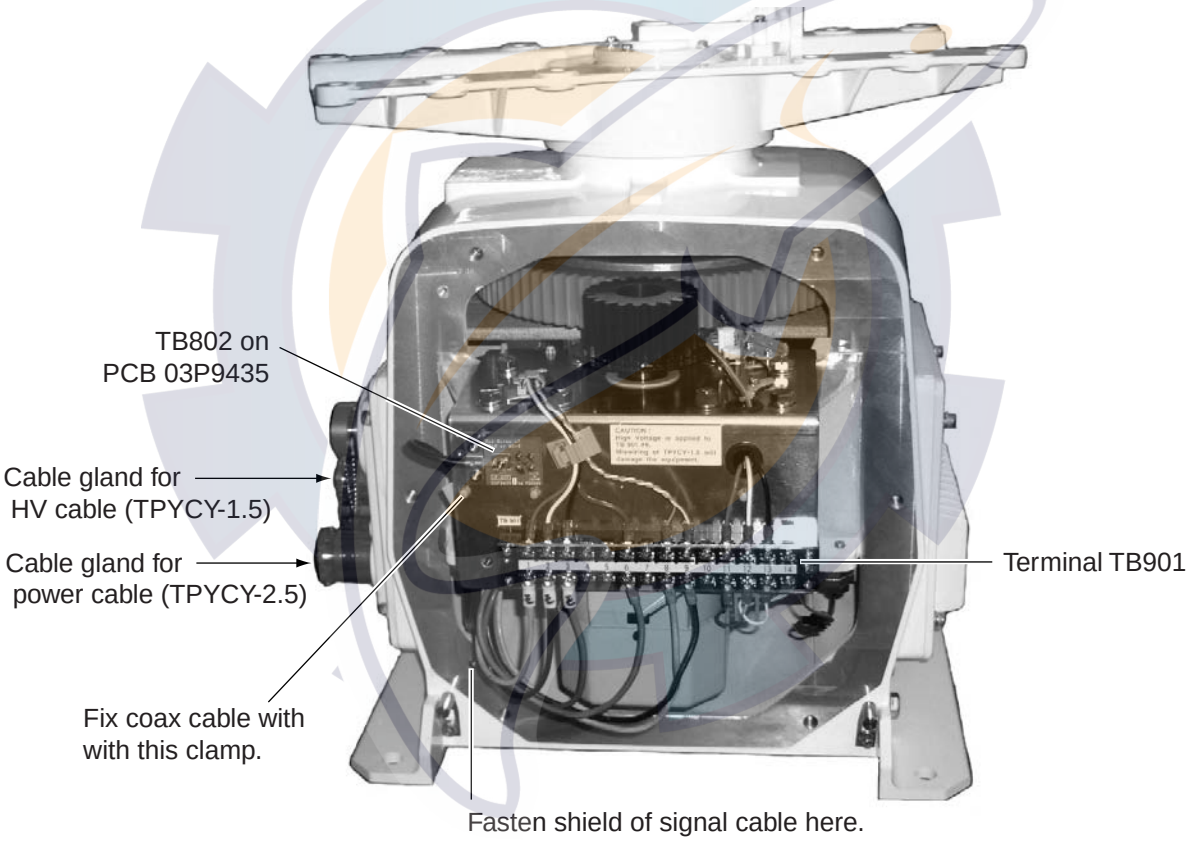

Antenna unit, front view

www.reelschematic.com

8. Connect coaxial cable to TB802 on the PCB 03P9435. Fix the shield and conductor as shown below.

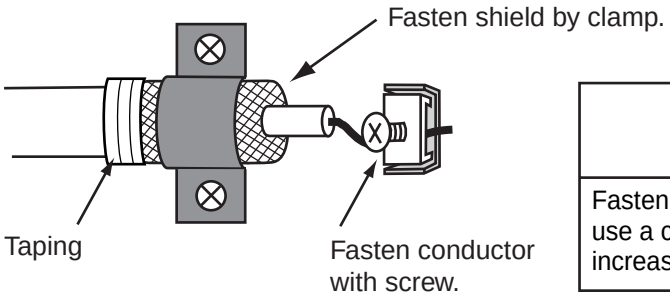

NOTICE

Fasten BARE conductor. Do not use a crimp-on lug, to prevent increased contact resistance.

How to fasten coaxial conductor

9. Referring to the illustration above for location, fasten shield (crimp-on lug FV5.5-4 attached) of signal cable with screw on chassis.
10. Pocess unused wires as follows:
    a) Slip shrink tubing onto cores and heat.
    b) Bind the wires with a cable tie and pass them through the cable gland on the chassis.
11. Close the cover which protects pcb 03P9436.
12. Seal the cable gland for the signal cable with putty.

www.reelschematic.com

Fabricating HV cable TYPCY-1.5 and power cable TYPCY-2.5

1. Unfasten the gland nut for the HV cable and remove gasket, flat washers (3 pcs.) and gland cap. (The gland cap may be discarded.)
2. Fabricate the HV cable as shown below.

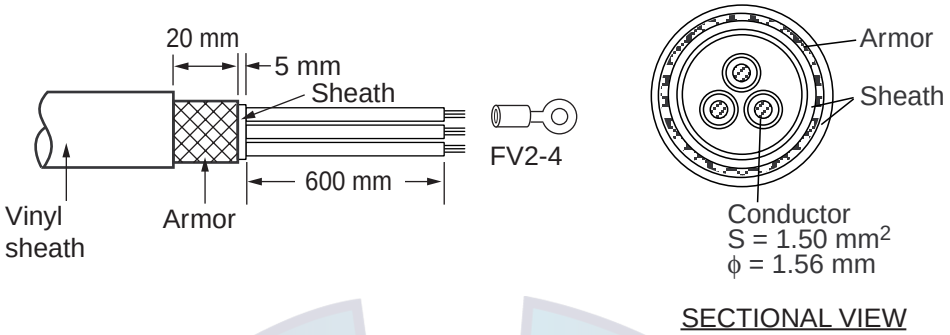

How to fabricate HV cable TYPCY-1.5

3. In the order shown in the figure below, pass the gland nut, flat washers (3 pcs.) and gasket onto the HV cable.
4. As shown in the figure below, fold back the armor onto flat washer (2) and insert remaining armor through flat washer (3). Cut off the part of the armor that protrudes past the flat washers (2) and (3).

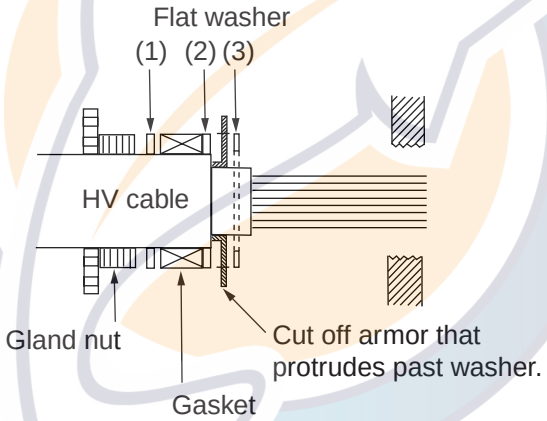

Passing flat washer, etc. onto HV cable

5. Pass the HV cable through its cable gland and then tighten gland nut.
6. Connect wiring to TB901, referring to the interconnection diagram.
7. Unfasten the gland nut for the power cable and remove gasket, flat washer (3 pcs.) and gland cap. (The gland cap may be discarded.)

www.reelschematic.com

8. Fabricate the power cable as shown below.

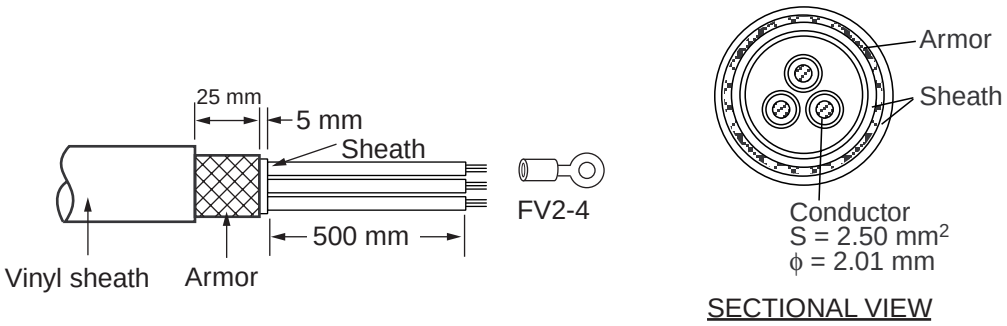

How to fabricate power cable TYPCY-2.5

9. In the order shown in figure below, pass the gland nut, flat washers (3 pcs.) and gasket onto the power cable.
10. As shown in the figure below, fold back the armor onto flat washer (2) and insert remaining armor through flat washer (3). Cut off the part of the armor that protrudes past the flat washers (2) and (3).

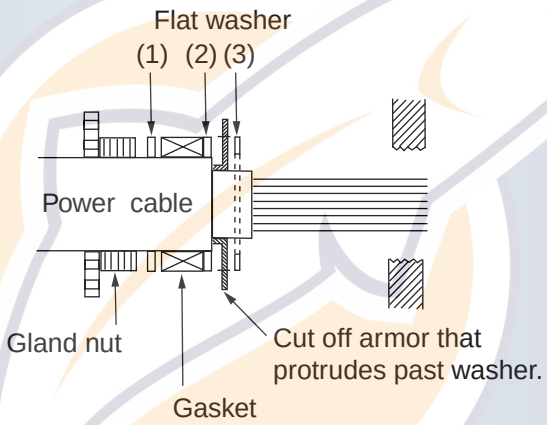

Passing flat washer, etc. onto power cable

11. Pass the power cable through its cable gland and tighten gland nut.
12. Connect wiring to the terminal TB901, referring to the interconnection diagram.

⚠ CAUTION

High voltage is present at the No. 6 pin of TB901. Miswiring at this pin can damage the antenna unit.

13. Close the cover that protects pcb 03P9435.
14. Seal the cable gland for the power cable and HV cable with putty.

www.reelschematic.com

2.3 Monitor Unit (for FAR-2157)

Two cables are terminated at the monitor unit: the signal cable from the processor unit (5 m or 10 m cable) and the power cable from the ship's mains. The signal cable comes with a connector pre-attached to it for connection to the monitor unit. Fabricate the power cable as below. Use cable DPYC-2.5 (Japan Industry Standard) or the equivalent. Be sure to ground the unit, with IV-8sq wire (local supply).

Note: Pass the AC line through a double-contact breaker (shipyard supply). Further, for vessels where the power line is grounded, connect one end of the line to the C (common) terminal and the other end to the H terminal.

Fabricating the power cable DPYC-2.5

1. Remove the armor from the cable by 40 mm.
2. Remove the vinyl sheath by 35 mm.
3. Remove the insulation from the cores by about 10 mm..
4. Peel paint from the armor by 40 mm.
5. Cover the end of the armor with vinyl tape. Fix crimp-on lugs (FV2-4, blue, supplied) to the cores.

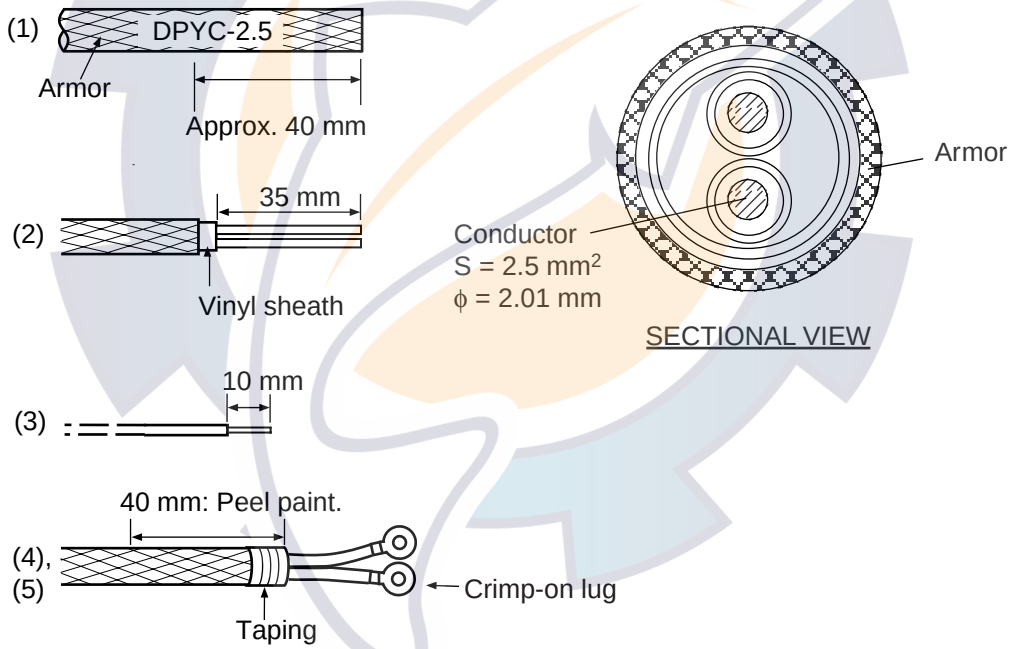

Fabricating power cable DPYC-2.5

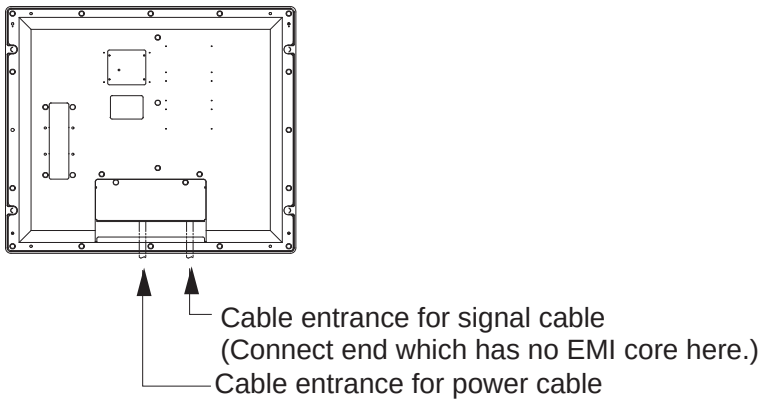

Monitor unit MU-201CR, rear view

www.reelschematic.com

2.4 Processor Unit

Four cables are terminated at the processor unit: the antenna unit cable, monitor unit cable (FAR-2157 only), control unit cable and the power cable. Cables other than the power cable come with a connector preattached to them. Fabricate the power cable as below.

Note: Pass the AC line through a double-contact breaker (shipyard supply). Further, for vessels where the power line is grounded, connect one end of the line to the C (common) terminal and the other end to the H terminal.

Fabricating the power cable DPYC-2.5

1. Remove the armor from the cable by 40 mm.
2. Remove the vinyl sheath by 35 mm.
3. Remove the insulation from the cores by about 10 mm.
4. Peel paint from the armor by 40 mm.
5. Tape the end of the armor with vinyl tape. Fix crimp-on lugs (FV2-4, blue, supplied) to the cores.

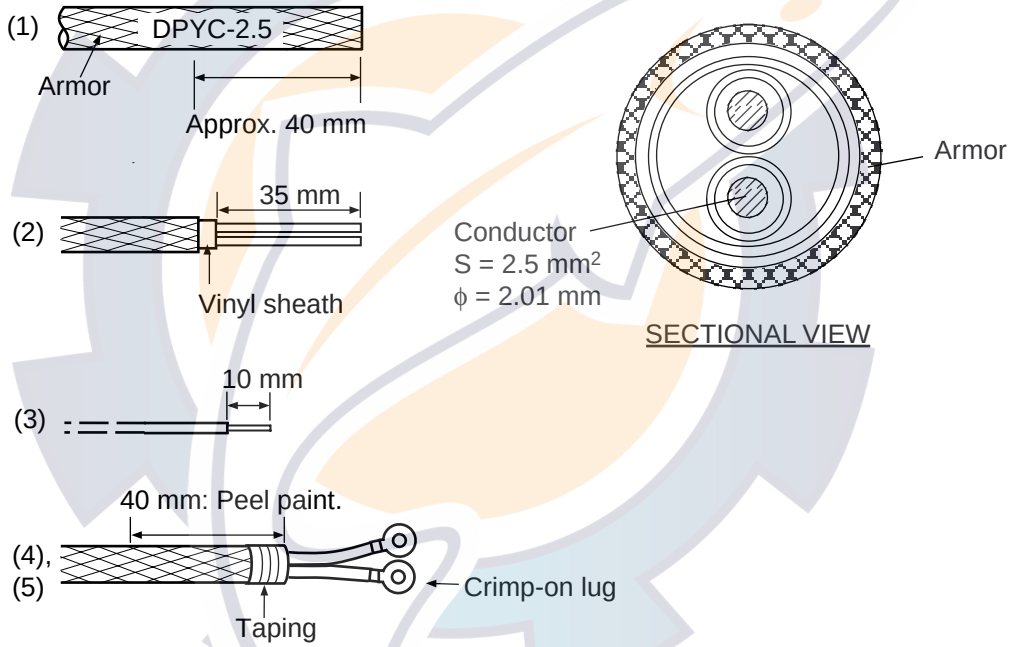

Fabricating power cable DPYC-2.5

www.reelschematic.com

Connection of cables

The power cable is connected to the terminal board on the rear panel and the signal cable from the monitor unit is connected to the DVI-D connector. Other cables are connected to the printed circuit board 03P9342. Be sure to ground the unit, with IV-8sq wire (local supply).

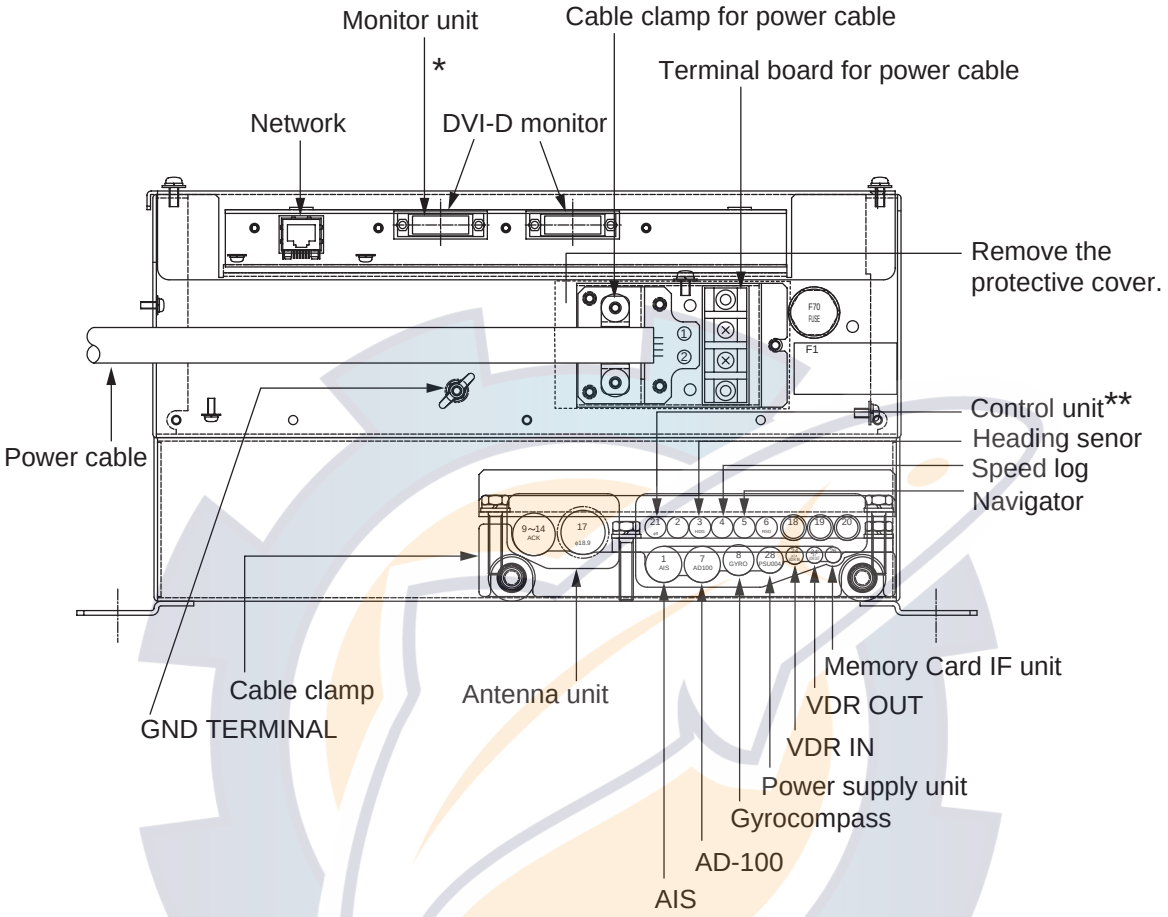

Processor unit, rear view

*: The connector with EMI core should be connected to the processor unit.

**: The configuration of optional cable between the processor unit and the control unit is as follows. Note that the cable fabrication for each end is different.

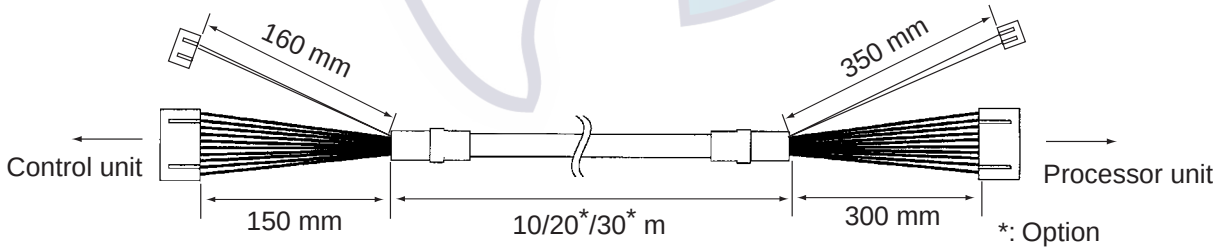

Cable XH10P-W-6P L=20/30M

When the RCU-016 is installed, optional cable (XH10P-W-5P-A, L=10/20/30M) is required. Cable fabrication for each end is the same.

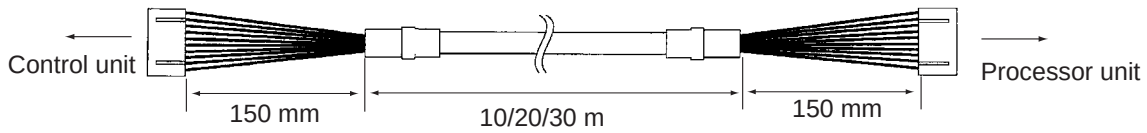

Cable XH10P-W-5P-A L=10/20/30M

www.reelschematic.com

Location of connectors

Open the processor unit as shown below to access the 03P9342 board, which is for connection of external equipment.

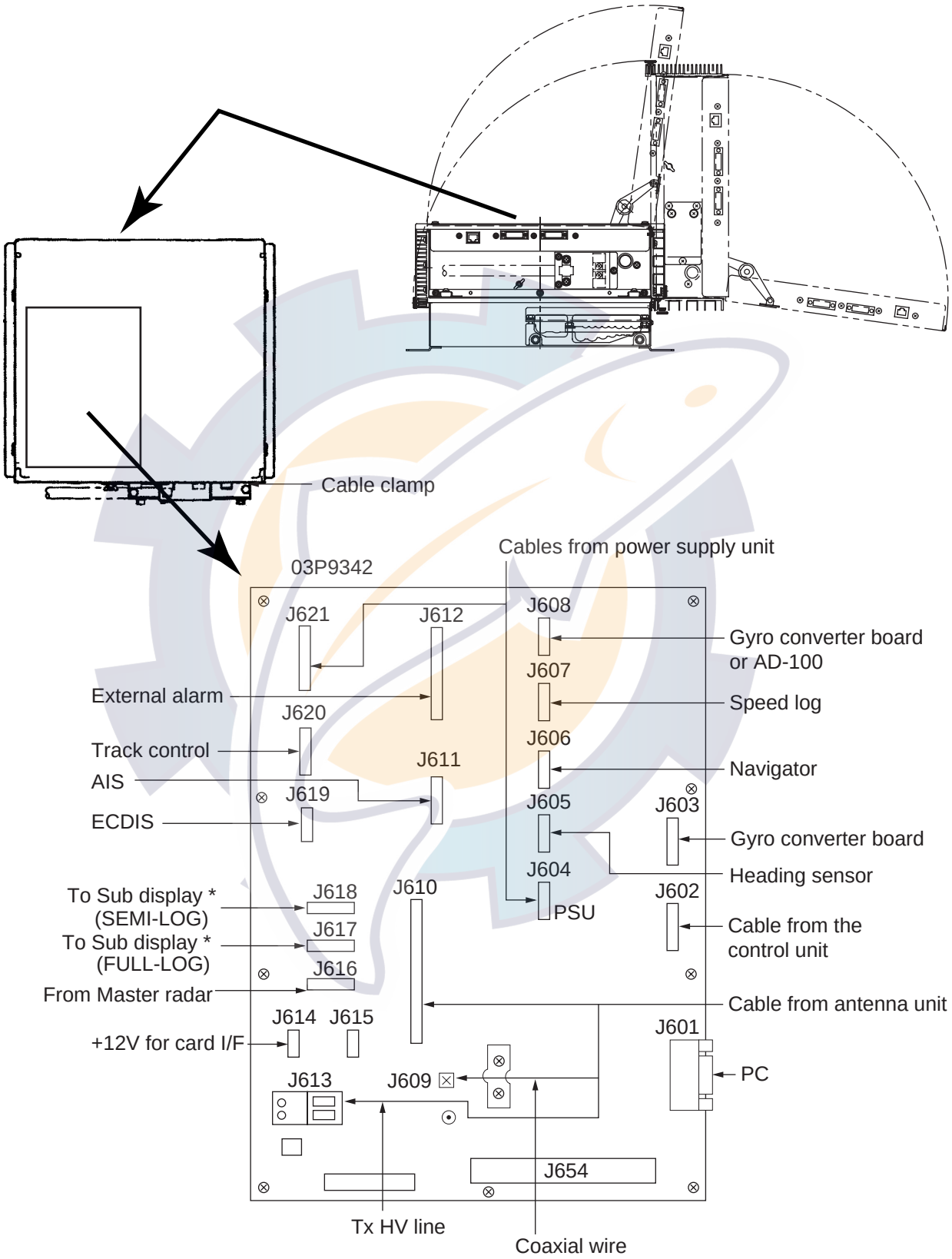

Location of connectors inside the processor unit

*: See page 2-12 for details.

www.reelschematic.com

Cable fabrication for the cables connected to the 03P9342 board

Signal cable RW-9600 (Between antenna unit and processor unit)

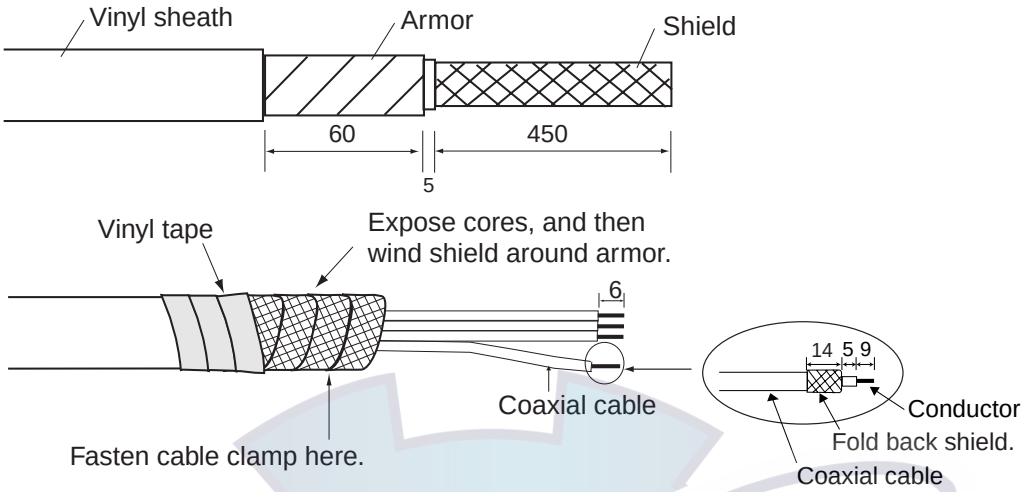

Power cable TPYC-1.5

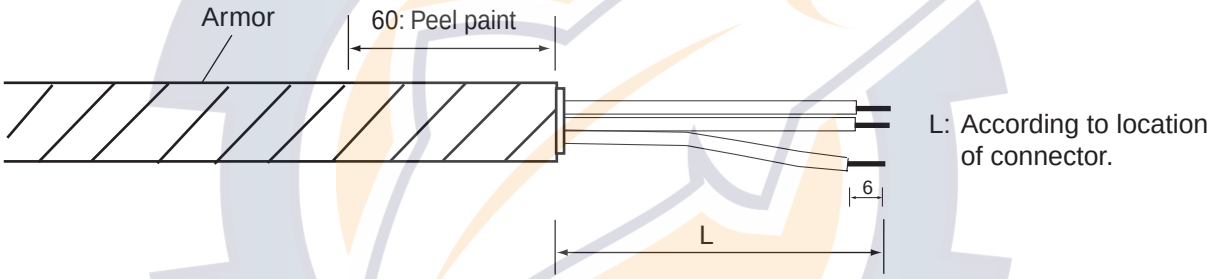

Cables for optional equipment (use TTYCS-1 or TTYCS-4, or equivalent)

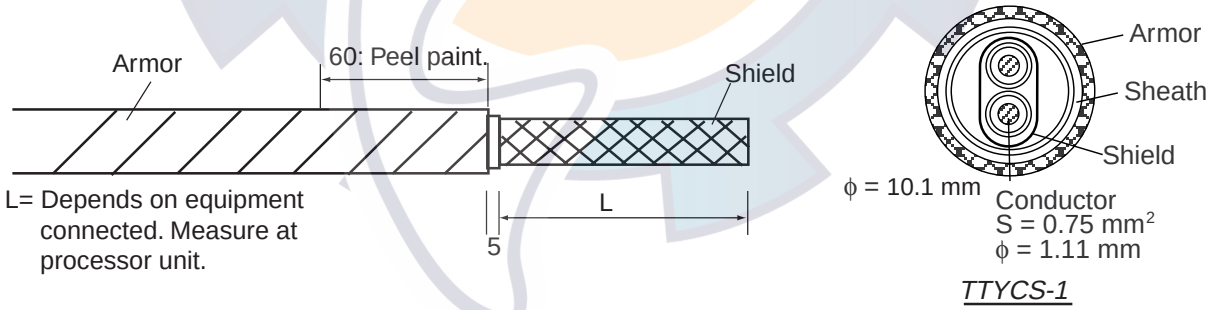

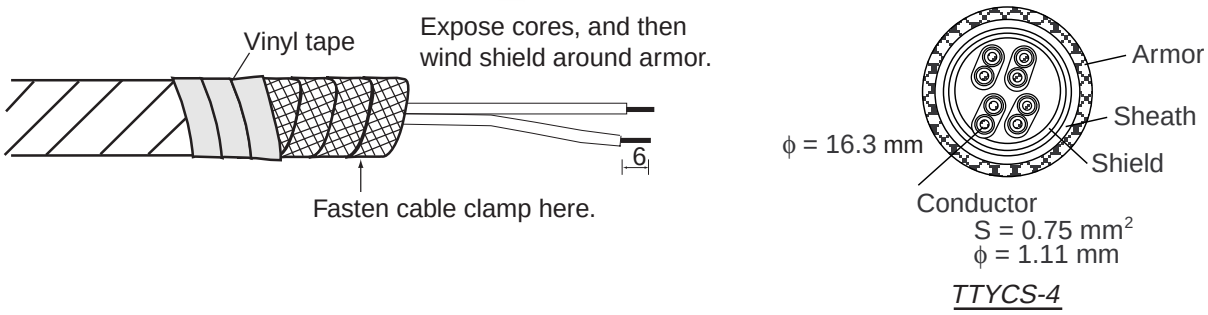

www.reelschematic.com

Wiring WAGO connector

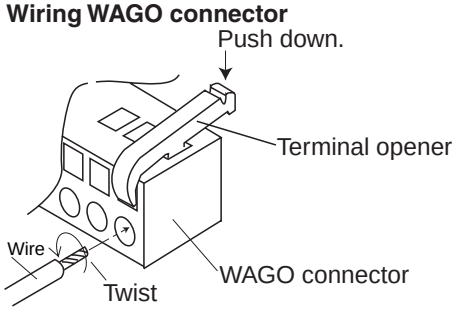

Procedure

1. Twist core.
2. Insert terminal opener as shown and push down.
3. Insert core into hole.
4. Release terminal opener.
5. Pull wire to confirm that it is firmly in place.

Fastening coaxial cable

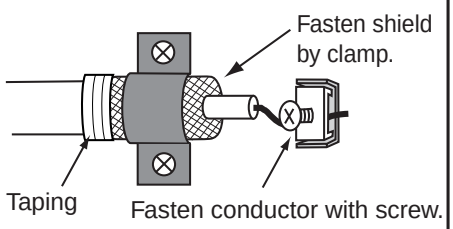

NOTICE

Fasten BARE conductor. Do not use crimp-on lug, to prevent increased contact resistance.

Connection of Sub-display

A conventional remote display and/or FAR-2xx7 series radar can be connected to J617 (FULL-LOG) and J618 (SEMI-LOG) in the processor unit as a sub-display. However, the control for GAIN and STC are different depending on J617 and J618. Refer to the table to connect sub-displays.

Port		Conventional remote display	FAR-2157
J617(FULL-LOG)GAIN and STC are not con-trolled. Video signal for conventional sub display is output.	Overall gain	Even if input video level is adjusted to 4 Vp-p, the gain is 8 db lower than that on the master radar.	The gain is 8 dB lower than that on the master radar.
	GAIN control	The GAIN control is effective.	The GAIN control has no effect.
	STC control	The STC control is effective.	The STC control has no effect.
J618(SEMI-LOG)Video signal of main radar controlled GAIN and STC is output.	Overall gain	When input video level is adjusted to 4 Vp-p, the gain becomes the same as that on the master radar.	The gain is almost same as that on the master radar.
	GAIN control	The GAIN control is effective.	The GAIN control has no effect.
	STC control	The STC control changes the radar image, however STC is doubly applied, resulting in improper radar picture. Therefore, it is not recom-mended to use this port.	The STC control has no effect.

www.reelschematic.com

2.5 Power Supply Unit

Wire the power supply unit referring to the interconnection diagram. Be sure to ground the unit, with IV-8sq wire (local supply).

Note 1: Motor specification cannot be changed in the field.

Note 2: Pass the AC line through a double-contact breaker (shipyard supply). Further, for vessels where the power line is grounded, connect one end of the line to the C (common) terminal and the other end to the H terminal.

⚠ CAUTION

High voltage is present at the No. 6 pin of TB3. Miswiring at this pin can damage the unit.

Power supply unit, inside view

Fabricating cable connected to terminal TB1, TB2, TB3

Terminal TB1: cable DPYC-2.5

See page 2-8 for sectional view of cable if using equivalent cable.

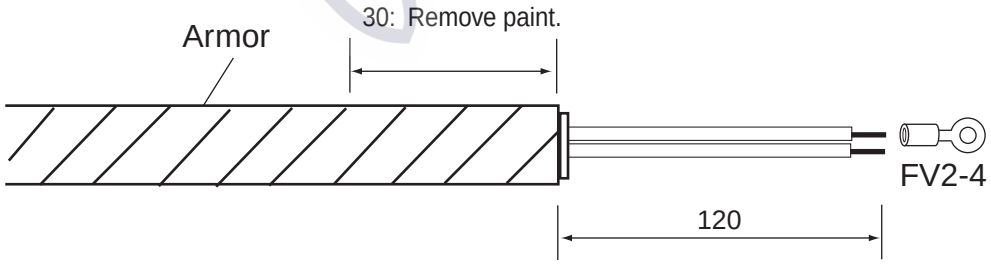

www.reelschematic.com

Terminal TB2: cable TPYC-2.5 (for antenna motor)
Terminal TB3: #11-#13, cable TYPC-1.5 (between power control section and processor)

See page 2-5 for sectional views of these cables if using equivalent cables.

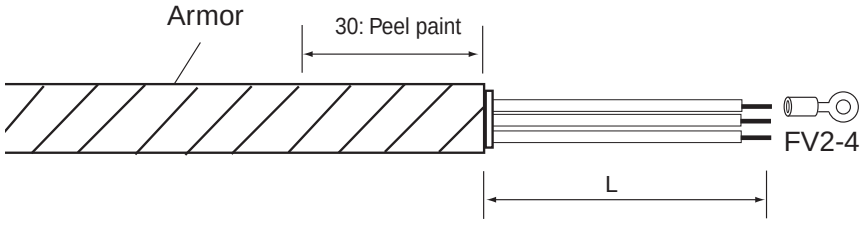

L: 100 (For TPYC-2.5)
150 (For TPYC-1.5)

Terminal TB3: #1-#3 TPYCY-2.5 (between power control section and antenn)
Terminal TB3: #6, #8, #9 TPYCY-1.5 (between power control section and antenna)

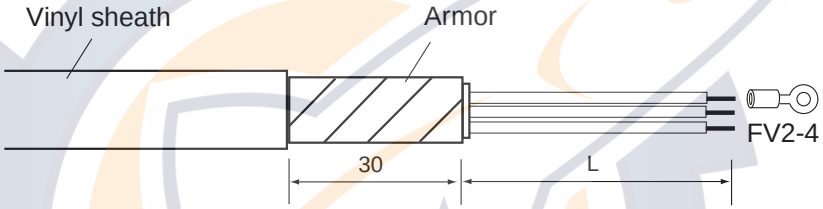

L: 80 (For TPYCY-2.5)
120 (For TPYCY-1.5)

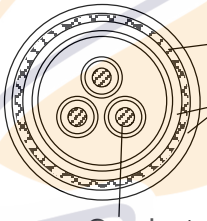

ϕ = TYPCY-1.5: 14.5 mm
TPYCY-2.5: 15.5 mm

Conductor
S= TPYCY-1.5: 1.5^2 mm, TPYCY-2.5: 2.5^2 mm
ϕ = TPYCY-1.5: 1.56 mm, TPYCY-2.5: 2.01 mm

www.reelschematic.com

2.6 Changing AC Power Specification

To change AC power specification from 100 VAC to 220 VAC and vice versa, change fuse and jumper wire settings and adjust the overvoltage detection circuit, following the instructions in this section.

Processor unit

Add or remove jumper connector P108 from the PWR board 03P9339 and change the fuse in the processor unit according to ship's mains. Then, adjust the overvoltage detection circuit, the procedure for which is shown on the next page.

Note: When switching from 220 VAC to 100 VAC, construct a jumper connector locally, referring to the illustration on the next page. (VH8 connector housing is to be plugged into J108.)

Power supply	Fuse	Jumper connector P108
100 VAC	10A	Necessary
220 VAC	5A	Unnecessary

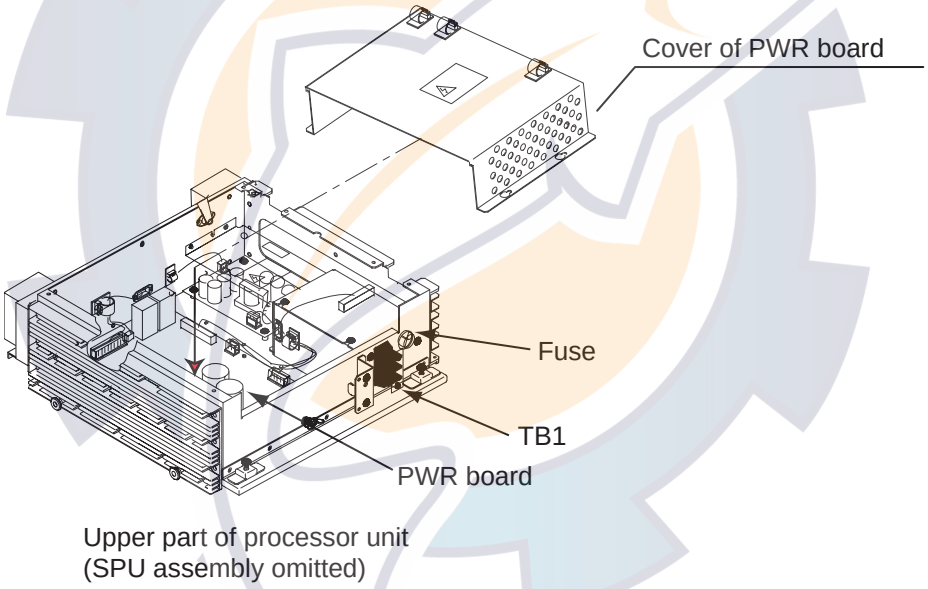

Processor unit, inside view

www.reelschematic.com

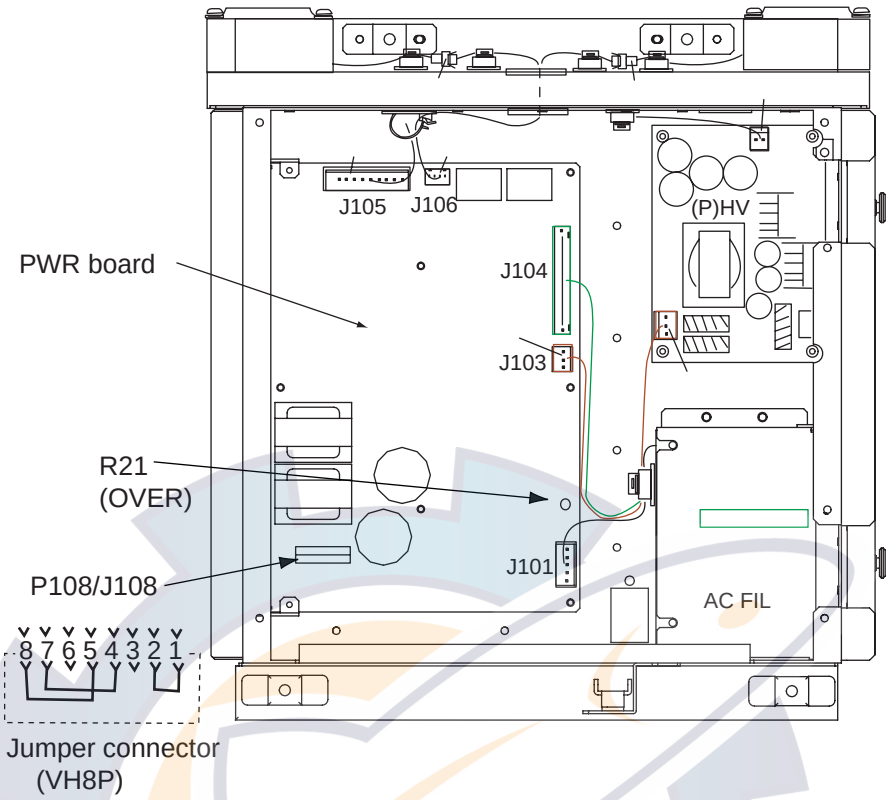

Processor unit, inside view

How to adjust the overvoltage detection circuit:

1. Add or remove the jumper connector P108 as appropriate and change the fuse, referring to the table on the previous page for details.
2. On the PWR board, set R21 fully clockwise.
3. Connect a variable transformer between ship's mains and the input power terminal board TB-1 in the processor unit.
4. Adjust the variable transformer output (i.e., input voltage to the processor unit) as follows:

   For 100 VAC set: 144 VAC
   For 220 VAC set: 288 VAC
5. Turn on the radar and rotate R21 counterclockwise gradually until the overvoltage detection circuit activates (i.e., power supply cuts off).
6. Lower the output voltage of the variable transformer and confirm that the radar automatically turns on with a voltage lower than 142 VAC or 284 VAC.
7. Gradually increase the output voltage of the variable transformer and confirm that the overvoltage detection circuit activates at 144 V or 288 VAC of the variable transformer output.
8. Assemble and connect the processor unit.

www.reelschematic.com

Power supply unit

Refer to the illustration and table below to add (or remove) jumper connector P8 from the TX-HV Board (03P9350) and change fuse.

After completing jumper and fuse arrangements, adjust the overvoltage detection circuit, using a variable transformer.

Note: When switching from 220 VAC to 100 VAC, construct a jumper connector locally, referring to the illustration below. (VH6 connector housing is to be plugged into J8.)

Power	Fuse	Jumper connector P8
100 VAC	5A	Required
220 VAC	3A	Unnecessary

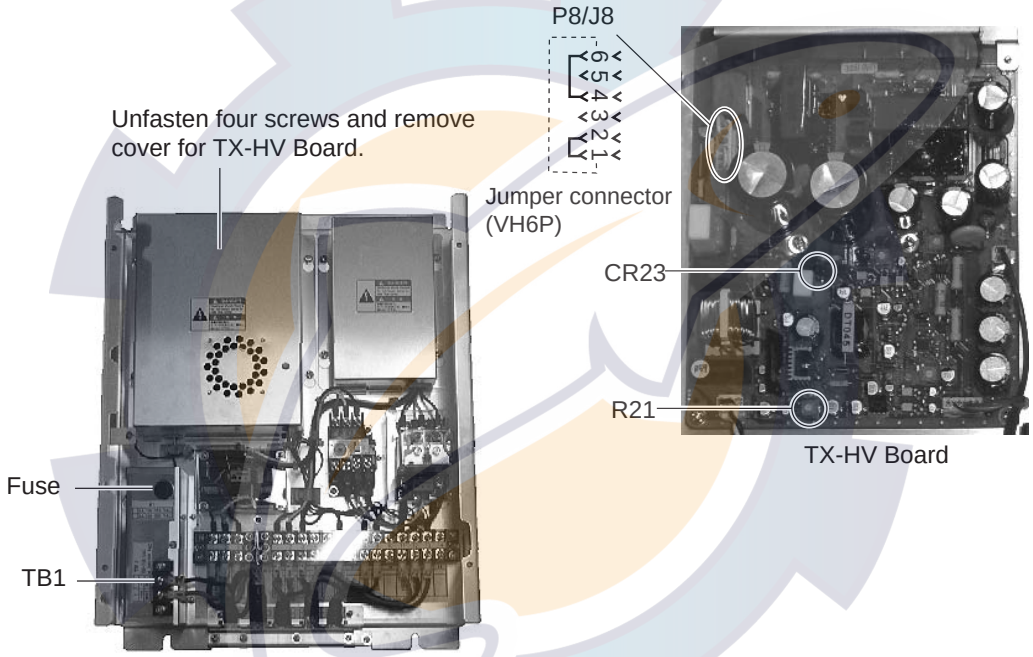

How to adjust the overvoltage detection circuit

1. Add or remove the jumper connector P8 as appropriate and change the fuse, referring to the table above for details.
2. On the PWR board, set R21 fully clockwise.
3. Connect a variable transformer between ship's mains and the input power terminal board TB-1 in the processor unit.
4. Adjust the variable transformer output (i.e., input voltage to the processor unit) as follows:
   For 100 VAC set: 144 VAC
   For 220 VAC set: 288 VAC
5. Turn on the radar and rotate R21 counterclockwise gradually until the overvoltage detection circuit activates (i.e., power supply cuts off).
6. Lower the output voltage of the variable transformer and confirm that the radar automatically turns on with a voltage lower than 142 VAC or 284 VAC.
7. Gradually increase the output voltage of the variable transformer and confirm that the overvoltage detection circuit activates at 144 V or 288 VAC of the variable transformer output.
8. Assemble and connect the power supply unit.

www.reelschematic.com

3. ADJUSTMENTS

This section provides the information necessary for setting and adjusting the radar, which is carried out from the radar's menu system. Menus may be accessed from the keyboard or on-screen menu in case of Control Unit RCU-014, or on-screen menu in case of Control Unit RCU-015.

The menu illustrations in this chapter show default settings in bold face.

3.1 Initializing Tuning

1. Transmit the radar on 48 nm range.
2. Rotate the [GAIN] control until the value on the gain bar is 70-80.
3. Left-click the MENU box at the right side of the screen.
4. Spin the thumbwheel to choose 1 ECHO and then push the thumbwheel.

[ECHO]

1 BACK
2 2ND ECHO REJ
OFF/ON
3 TUNE INITIALIZE

5 SART
OFF/ON
6 WIPER
OFF/1/2
7 ECHO AREA*
CIRCLE/WIDE/**ALL**

* Not available with IMO radar

ECHO menu

5. Spin the thumbwheel to choose 3 TUNE INITIALIZE.
6. Push the thumbwheel to initialize automatic tuning.

   In a few moments echoes appear on the screen. The message "TUNE INITIALIZE" appears (in red) during automatic tuning. When this message disappears, the tuning is completed. If necessary adjust the [GAIN] control to show echoes clearly.
7. Push the right button twice to close the menu.

www.reelschematic.com

3.2 Heading Alignment

You have mounted the antenna unit facing straight ahead in the direction of the bow. Therefore, a small but conspicuous target dead ahead visually should appear on the heading line (zero degrees). In practice, you will probably observe some small bearing error on the display because of the difficulty in achieving accurate initial positioning of the antenna unit. The following adjustment will compensate for this error.

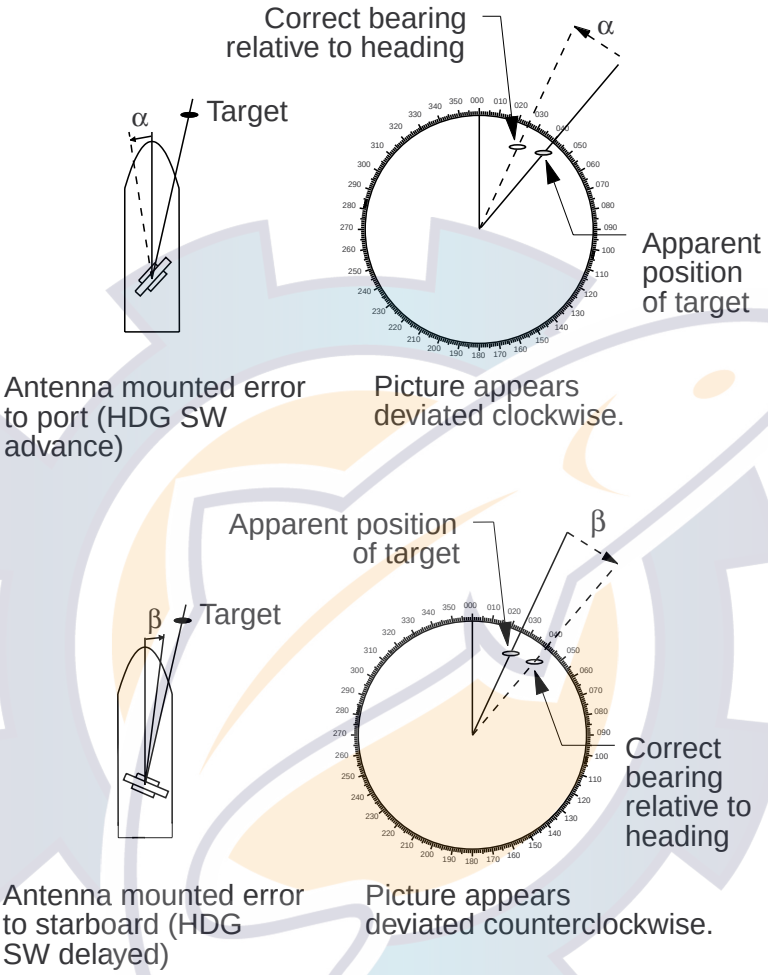

Heading alignment

1. Select a stationary target echo at a range between 0.125 and 0.25 nm, preferably near the heading line.
2. Operate the EBL control to bisect the target echo:
   a) Roll the trackball to place the arrow in the EBL1 or EBL2 box (at bottom left corner), whichever EBL you want to use.
   b) Push the left button to turn on the EBL.
   c) Push the left button again to send the cursor inside the effective display area.
   d) Roll the trackball (coarse adjustment) or spin the thumbwheel (fine adjustment) to bisect the target with the EBL.
3. Read the target bearing.
4. Measure the bearing of the stationary target on the navigation chart and calculate the difference between actual bearing and apparent bearing on the radar screen.
5. Left-click the MENU box at the right side of the screen to close the menu.

www.reelschematic.com

6. **For Control Unit RCU-014:**
   a) While pressing and holding down the [HL OFF] key, press the [MENU] key five times.
   b) Press the [0] key to show the INITIALIZE menu.
   For Control Unit RCU-015:
   See the procedure on the next page for how to show the INITIALIZE menu.

```
[INITIALIZE]
1 BACK
2 [ECHO ADJ]
3 [SCANNER]
4 [INSTALLATION]
5 [OWN SHIP INFO]
6 [ARP PRESET]
7 [NETWORK]
8 [OTHER]
```

INITIALIZE menu

7. **RCU-014:** Press the [2] key to open the ECHO ADJ menu.
   RCU-015: Choose 2 ECHO ADJ and then push the thumbwheel.

```
[ECHO ADJ]
1 BACK
2 CABLE ATT ADJ
    AUTO/MANUAL
    30
3 HD ALIGN
    000.0°
4 TIMING ADJ
    0
5 MBS
    0
6 DEFAULT ANT HEIGHT
    5/7.5/10/15/20/
    25/30/35/40/45/
    more 50 m
7 NEAR STC CURVE
    2/2.5/3/3.5/4.2
8 MID STC CURVE
    3/4/5/6
9 FAR STC CURVE
    6/7/8
0 RING SUPPRESSION
    0
```

ECHO ADJ menu

8. **RCU-014:** Press the [3] key to choose HD ALIGN.
   RCU-015: Choose 3 HD ALIGN and then push the thumbwheel.
9. **RCU-014:** Key in the bearing difference. The setting range is 0 to 359.9(°).
   RCU-015: Spin the thumbwheel to set the bearing difference and then push the thumbwheel. The setting range is 0 to 359.9(°).
10. Confirm that the target echo is displayed at correct bearing on the screen and then push the thumbwheel.
11. **RCU-014:** Press the [MENU] key to finish.
    RCU-015: Left-click the MENU box to finish.

www.reelschematic.com

How to access the INITIALIZE Menu with Control Unit RCU-015

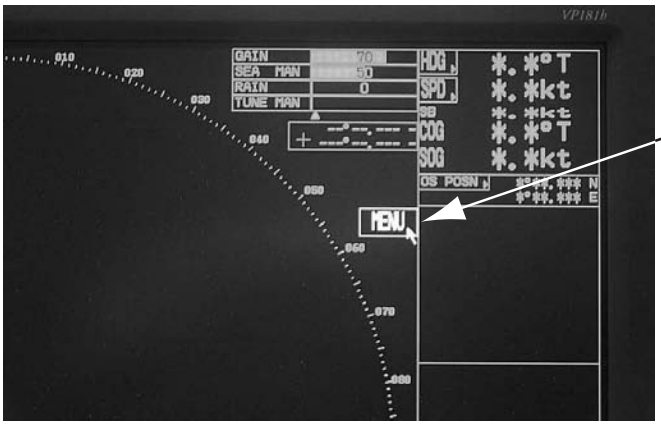

1. Use the trackball to place the pointer on the MENU box so it is highlighted. DO NOT click the menu box - just leave the pointer over "MENU".

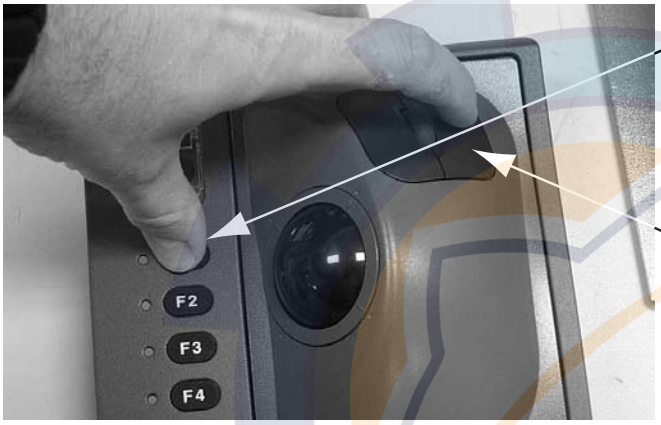

2. Press and hold down the F1 key. Keep it held down during the next step.

3. Push the right button five times. You should hear three beeps on the fifth push.

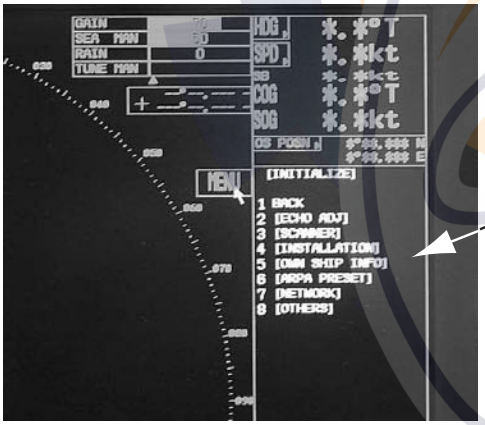

The INITIALIZE menu appears. Choose 4 INSTALLATION to show the installation menus.

Menu operation with trackball module

1. Roll the trackball to choose the MENU box and then push the thumbwheel or left button.
2. Spin the thumbwheel to choose menu item and then push the thumbwheel or left button.
3. Spin the thumbwheel to choose menu option and then push the thumbwheel or left button.
4. Left-click the MENU box to close the menu.

www.reelschematic.com

3.3 Adjusting Sweep Timing

Sweep timing differs with respect to the length of the signal cable between the antenna unit and the processor unit. Adjust sweep timing to prevent the following symptoms:

- The echo of a "straight" target (for example, pier), on the 0.25 m range, will appear on the display as being pulled inward or pushed outward. See the figure below.
- The range of target echoes will also be incorrectly shown.

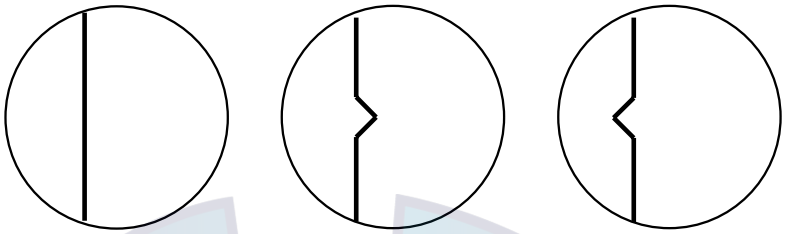

(1) Correct (2) Target pushed inward (3) Target pushed outward

Examples of correct and incorrect sweep timings

1. Transmit on the 0.25 nm range.
2. Adjust the radar picture controls to display picture properly.
3. Select a target echo which should be displayed straightly.
4. On the ECHO ADJ menu, choose 4 TIMING ADJ.

[ECHO ADJ]
1 BACK
2 CABLE ATT ADJ
AUTO/MANUAL
30
3 HD ALIGN
000.0°
4 TIMING ADJ
0
5 MBS
0
6 DEFAULT ANT HEIGHT
5/7.5/10/**15**/20/
25/30/35/40/45/
more 50 m
7 NEAR STC CURVE
2/2.5/**3**/3.5/4.2
8 MID STC CURVE
3/**4**/5/6
9 FAR STC CURVE
6/**7**/8
0 RING SUPPRESSION
0

ECHO ADJ menu

5. Spin the thumbwheel to set a suitable value which causes the target to be displayed straightly. The setting range is 0 to 4095.
6. Left-click the MENU box to finish.

www.reelschematic.com

3.4 Suppressing Main Bang

If main bang appears at the screen center, suppress it as follows.

1. Transmit the radar on a long range and then wait ten minutes.
2. Adjust gain to show a slight amount of noise on the display.
3. Select the 0.25 nm range. Adjust sea clutter control to suppress sea clutter.
4. On the ECHO ADJ menu, choose 5 MBS.

[ECHO ADJ]

1 BACK
2 CABLE ATT ADJ
AUTO/MANUAL
30
3 HD ALIGN
000.0°
4 TIMING ADJ
0
5 MBS
0
6 DEFAULT ANT HEIGHT
5/7.5/10/**15**/20/
25/30/35/40/45/
more 50 m
7 NEAR STC CURVE
2/2.5/**3**/3.5/4.2
8 MID STC CURVE
3/**4**/5/6
9 FAR STC CURVE
6/**7**/8
0 RING SUPPRESSION
0

ECHO ADJ menu

5. Spin the thumbwheel to set a suitable value so that the main bang disappears. The setting range is 0 to 255.
6. Left-click the MENU box to finish.

www.reelschematic.com

3.5 Other Settings

ECHO menu setting

Open the ECHO ADJ menu as described on page 3-3 and 3-4.

```
[ECHO ADJ]
1 BACK
2 CABLE ATT ADJ
    AUTO/MANUAL
    30
3 HD ALIGN
    000.0°
4 TIMING ADJ
    0
5 MBS
    0
6 DEFAULT ANT HEIGHT
    5/7.5/10/15/20/
    25/30/35/40/45/
    more 50 m
7 NEAR STC CURVE
    2/2.5/3/3.5/4.2
8 MID STC CURVE
    3/4/5/6
9 FAR STC CURVE
    6/7/8
0 RING SUPPRESSION
    0
```

ECHO ADJ menu

CABLE ATT ADJ

Before adjusting, set the radar as follows (Same as default setting of PICTURE1):
IR: 2, ES: off, EAV: off, 24nm range, long pulse

To adjust the cable attenuation manually, choose MANUAL and push the thumbwheel. With the gain set to 80, spin the thumbwheel until noise just appears on the screen. Default setting is 30 for the antenna cable length of 15 m. The setting range is 0 to 73.

To adjust the cable attenuation automatically, choose AUTO and push the thumbwheel. The message "CABLE ATT ADJ" appears (in red) at the bottom of the screen. It takes about five minutes to complete the adjustment, after which the radar goes into stand-by.

DEFAULT ANT HEIGHT

Select height (m) of the radar antenna unit from the sea surface from among 5, 7.5, 10, 15, 20, 25, 30, 35, 40, 45 and "more 50 m".

NEAR STC CURVE, MID STC CURVE AND FAR STC CURVE

The default setting is suitable for most conditions. If necessary, change the setting according to sea conditions.

RING SUPPRESSION

This is mainly used to removes "ring" noise that appears in the waveguide-type radar. Adjust so the rings disappear at the range of 0.125 nm. The setting range is 0 to 255.

www.reelschematic.com

SCANNER menu

1. Open the INITIALIZE menu as described on page 3-3 and 3-4.
2. Choose 3 SCANNER to open the SCANNER menu.

```
[SCANNER]
1  BACK
2  BLIND SECTOR 1
     START 000°
     ANGLE 000°
3  BLIND SECTOR 2
     START 000°
     ANGLE 000°
4  ANT REVOLUTION
     LO/HI/AUTO
5  ANT SW
     OFF/ON
6  ANT STOPPED
     STBY/TX
7  M SPEC
     OFF/ON
8  BB TYPE
     NORMAL/BB
```

SCANNER menu

BLIND SECTOR 1 and BLIND SECTOR 2

Set area (up to 2) where no radar pulses will be transmitted. Heading should be adjusted before setting any blind sector. For example, set the area where an interfering object at the rear of the antenna would produce a dead sector (area where no echoes appear) on the display. To enter an area, enter start bearing (relative to heading) and dead sector angle. To erase the area, enter 0 for both the START and ANGLE options. The setting range of START is 0 to 359° and ANGLE is 0 to 180°.

ANT REVOLUTION

No use.

ANT SW and ANT STOPPED

This is used for antenna maintenance by service personnel.

M SPEC

No use.

BB TYPE

Choose type of radar. Select "BB" for FAR-2157-BB.

www.reelschematic.com

INSTALLATION menu

Open the INSTALLATION menu by choosing 4 INSTALLATION from the INITIALIZE menu.

[INSTALLATION]

1 BACK
2 RADAR
  MAIN/SUB
3 RANGE UNIT*1
  NM/SM/km/kyd
4 RADAR NO*2
  1/2/3/4/5/6/7/8
5 RADAR POSN
  FORE/**MAIN TOP**/
  MAIN 2ND/MAIN 3RD/
  AFT/PORT/
  STARBOARD
6 MODEL
  6/**12**/25 UP/25 DOWN/
  50/30 UP/30 DOWN/60
7 TYPE
  IMO/A/B/C/W
8 ON TIME
  XX.XH
9 TX TIME
  XX.XH

*1: Not shown on IMO- or A-type radar.
*2: No.1-4: with antenna unit
No.5-8: without antenna unit

INSTALLATION menu

RADAR

Choose main radar or sub radar.

RANGE UNIT

Choose NM, SM, km or kyd (kilo yard) as appropriate. For the IMO- and A-type radars the range unit is fixed at "NM".

RADAR NO and RADAR POSN

For multiple radar system using the network hub, set number (name) and antenna position for each system, to easily distinguish radars from one another.

MODEL

Choose "50".

TYPE

Choose radar type from among the following options:

IMO: IMO compliant
A: Near-IMO specifications
B: International fishing vessels
C: Japanese flag vessels
W: Washington state (USA) ferry

ON TIME and TX TIME

These items show number of hours the radar has been turned on and transmitted, respectively. Value can be changed; for example, after replacing magnetron TX Time can be reset to 0.

www.reelschematic.com

OWN SHIP INFO menu

Open the OWN SHIP INFO menu by choosing 5 OWN SHIP INFO from the INITIALIZE menu.

```
[OWNSHIP INFO]
1  BACK
2  LENGTH/WIDTH
     LENGTH  100 m
     WIDTH    50 m
3  SCANNER POSN
     BOW     0 m
     PORT    0 m
4  GPS1 ANT POSN
     BOW     0 m
     PORT    0 m
5 GPS2 ANT POSN
     BOW     0 m
     LEFT    0 m
6  CONNING POSN
     BOW     0 m
     PORT    0 m
```

OWN SHIP INFO menu

LENGTH/WIDTH and SCANNER POSN

To accurately inscribe own ship marker on the screen, enter length and width of the ship and antenna position from the bow and left sides. The setting ranges are as follows:

LENGTH: 0 to 999 m
WIDTH: 0 to 999 m
BOW: 0 to 999 m
LEFT: 0 to 999 m

GPS 1 ANT POSN and GPS 2 ANT POSN

This is for AIS. Enter the GPS antenna position, from the bow and left side. The setting ranges are the same as above.

CONNING POSN

Enter the conning position, from the bow and left side. The setting ranges are the same as those shown on the preceding page. When you set the reference point as the conning position, these values are used to correct the radar antenna position.

Note: If two or more radars are installed, all items on the OWN SHIP INFO menu should be the same except 3 SCANNER.

www.reelschematic.com

ARPA PRESET menu

Open the ARPA PRESET menu by choosing 6 ARP PRESET from the INITIALIZE menu.

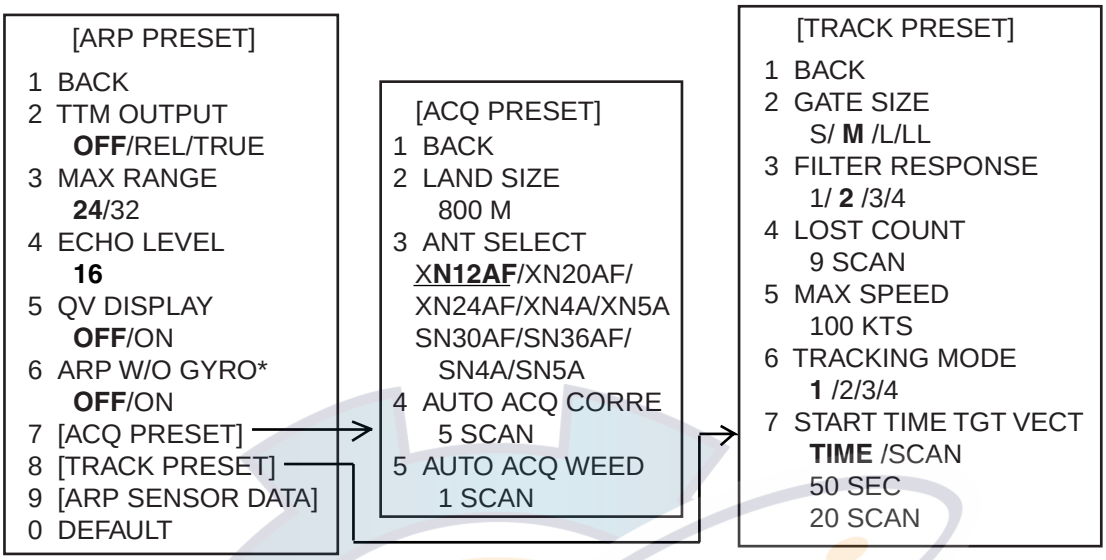

*: Not shown on IMO radar.

ARP-related menus

TTM OUTPUT

Set the output format of tracked targets among OFF, REL and TRUE.

OFF: No output
REL (relative): Target bearing from own ship, degree relative.
Target course, degree relative.
TRUE: Target bearing, degree true.
Target course, degree true.

Note: The TTM OUTPUT port changes according to the setting for INS as described on page 3-13.

INS-OFF: Output from J619 port
INS-SERIAL: Output from J620 port
INS-LAN: Output from NETWORK port

MAX RANGE

Choose the maximum ARPA tracking range, 24 or 32 nm.

ECHO LEVEL

Set echo detection level. The setting range is 1 to 31.

QV DISPLAY

OFF: Normal picture
ON: Quantized picture. Always off at power on.

ARP W/O GYRO (Not shown on IMO radar)

ARPA may be used without a gyrocompass. Choose ON to use ARPA without a gyrocompass.

www.reelschematic.com

LAND SIZE

Set the minimum echo size to be considered a landmass. The setting range is 100 to 1000 m, in increments of 100 m.

ANT SELECT

Set the model of antenna radiator used.

AUTO ACQ CORRE

Set the number of consecutive echoes to receive from a target before initiating automatic acquisition on it. The setting range is 3 to 10.

AUTO ACQ WEED

Set the number of consecutive "no echoes" from a target before canceling automatic acquisition on it. The setting range is 1 to 5.

GATE SIZE

Set the gate size among S, M, L, or LL.

FILTER RESPONSE

Set the filter response function. The setting range is 1 to 4. Choose 1 for better trackability; 4 for better stability.

LOST COUNT

Set the number of consecutive "no echoes" before an acquired target is declared as a lost target. The setting range is 1 to 20.

MAX SPEED

Set the maximum tracking speed. The setting range is 40 to 150.

TRACKING MODE

Set the tracking mode among 1 to 4.

START TIME TGT VECT

Choose how to wait from time of acquisition to display of vector. Choose TIME to set by time (seconds) or SCAN to set by number of antenna scans.

www.reelschematic.com

OTHER menu

Open the OTHER menu by choosing 8 OTHERS from the INITIALIZE menu.

[OTHERS]
1 BACK
2 DEMO ECHO
OFF/EG/SPU/PC
3 EAV w/o GYRO
OFF/ON
4 ARP SELECT
ARPA/ATA
5 INS
OFF/SERIAL/**LAN**

OTHER menu

EAV w/o GYRO

Echo averaging can be used without a gyrocompass. Choose ON to use echo averaging without a gyrocompass.

ARP SELECT

Choose ARPA or ATA depending on your radar system.

INS

Choose appropriate item according to the ECDIS connected.

OFF: No connection
SERIAL: When connecting FEA-2105 series ECDIS.
LAN: When connecting FEA-2107 series ECDIS.

www.reelschematic.com

This page intentionally left blank.

www.reelschematic.com

4. OPTIONAL EQUIPMENT

4.1 Gyro Converter GC-10

The Gyro Converter GC-10, incorporated inside the processor unit, converts analog gyrocompass reading into digital coded bearing data for display on the radar screen.

This section explains how to install the GC-10 (mainly consisting of the GYRO CONVERTER board) and set it up according to the gyrocompass connected.

Installing the GYRO CONVERTER board

Necessary Parts: Gyro Converter GC-10-2 (Code no. 000-080-440)

See packing list at the back of this manual for details.

1. Open the processor unit.

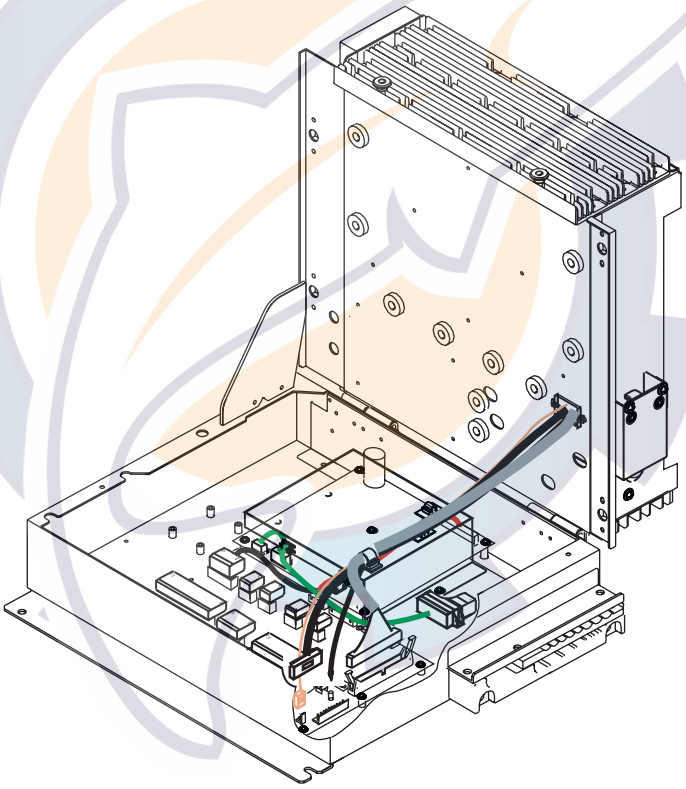

Processor unit, inside view

www.reelschematic.com

2. Fasten the GYRO CONVERTER board inside the processor unit with five washer head screws.
3. Fix connector 231-607/019-FUR (called J602) with two screws.

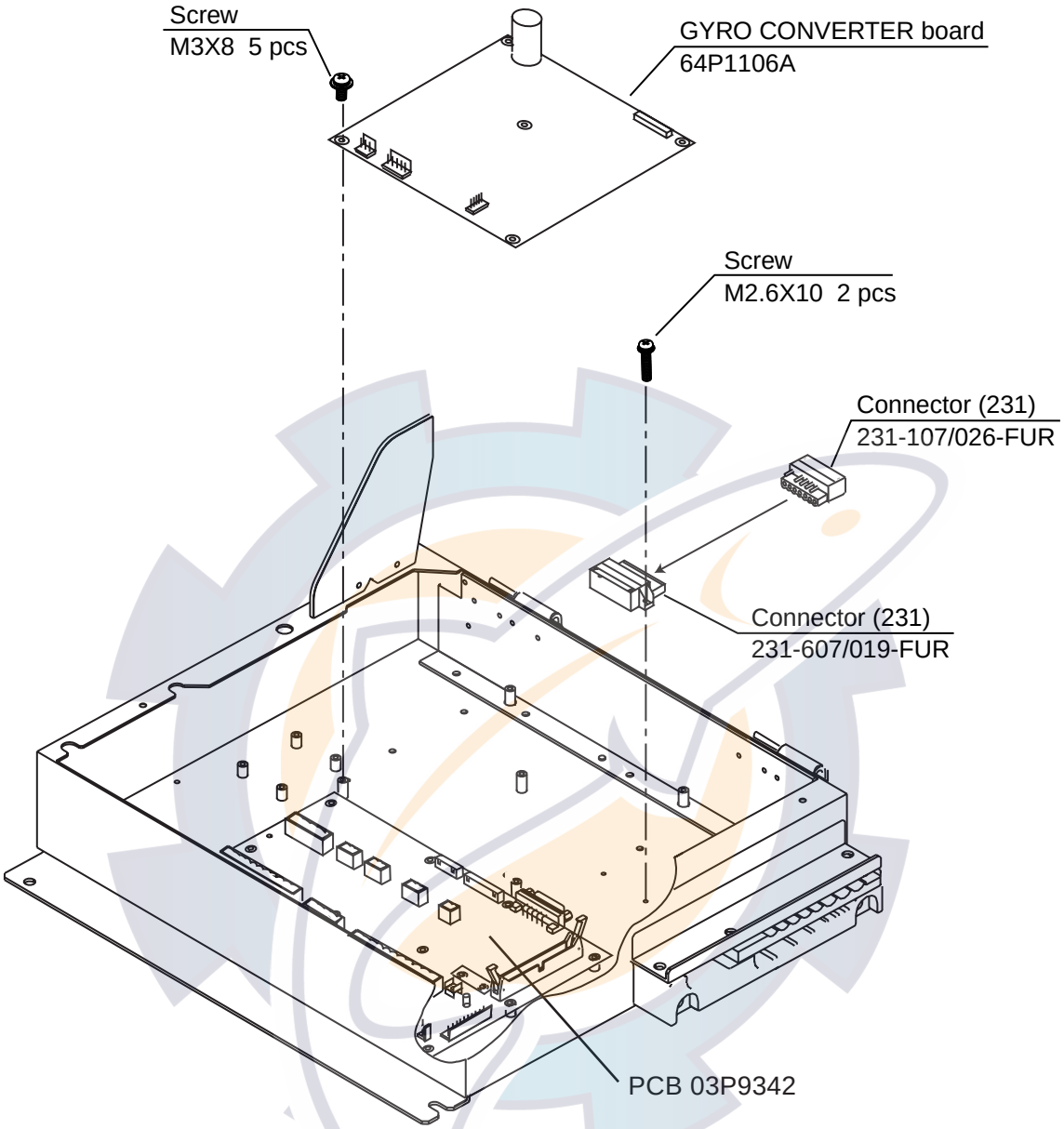

Fixing GYRO CONVERTER board inside the processor unit

4. Connect the GYRO CONVERTER board to the 03P9342 board with XH-PH 03-2088 connector assy. (6-14P) and NH connector assy. 03-2091.

www.reelschematic.com

5. Connect J602 (attached at step 3) to the GYRO CONVERTER board with two VH connector assemblies 03-2089 (3P) and 03-2090 (5P).

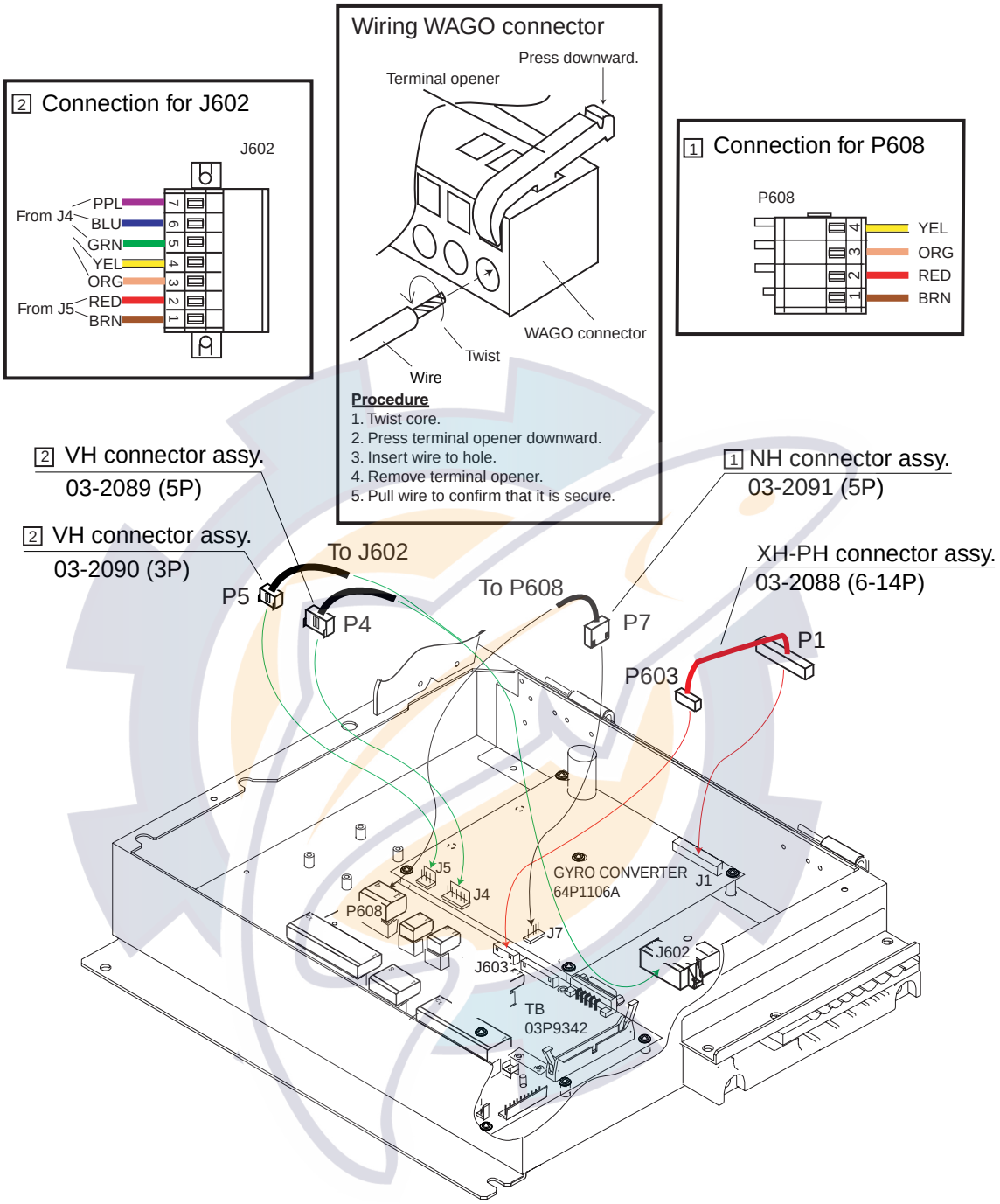

Connecting connector assemblies inside processor unit

6. Confirm gyrocompass specifications and set up the DIP switches and jumper wires on the GYRO CONVERTER board according to gyrocompass connected:
   - Setting jumper wires and DIP switches by gyrocompass specifications: page 4-6
   - Setting jumper wires and DIP switches by make and model of gyrocompass: page 4-7
   - Location of jumper wires and DIP switches: page 4-8

www.reelschematic.com

7. Pass the gyrocompass cable through the cable clamp and connect it to connector J602 as shown in the figure below.
8. Attach the clamps to the plastic cover and then attach the cover to the GYRO CONVERTER board as shown in the figure below. Pass cables thru the clamp ED-1.

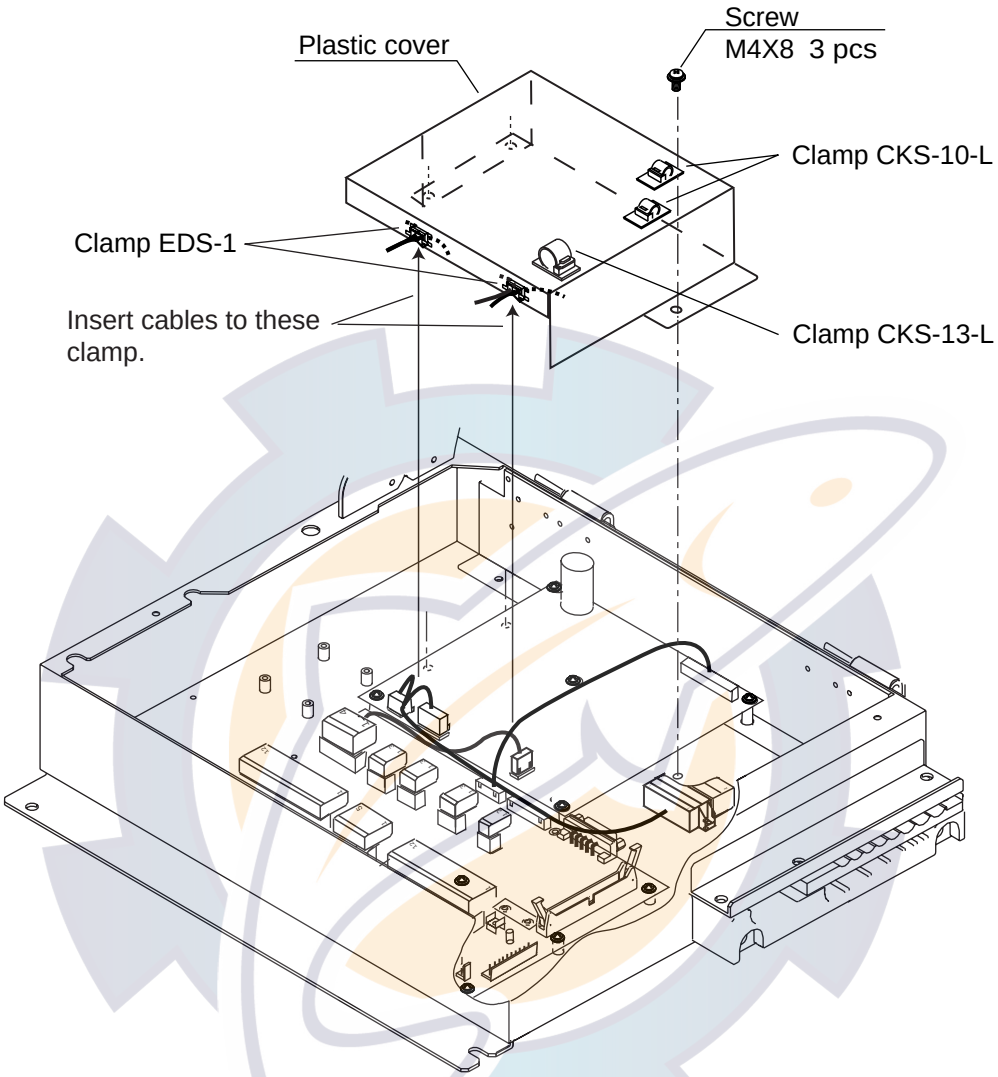

Attaching plastic cover for GYRO CONVERTER board

9. Close the processor unit.

www.reelschematic.com

Connection of external power supply

An external power supply is necessary when the repeater signal is step-by-step type and the step voltage is below 20 V or output voltage is less than 5 W.

1. Cut jumper wire JP1 on the GYRO CONVERTER board when an external power supply is used.
2. Connect the gyrocompass cable and power cable as shown below.

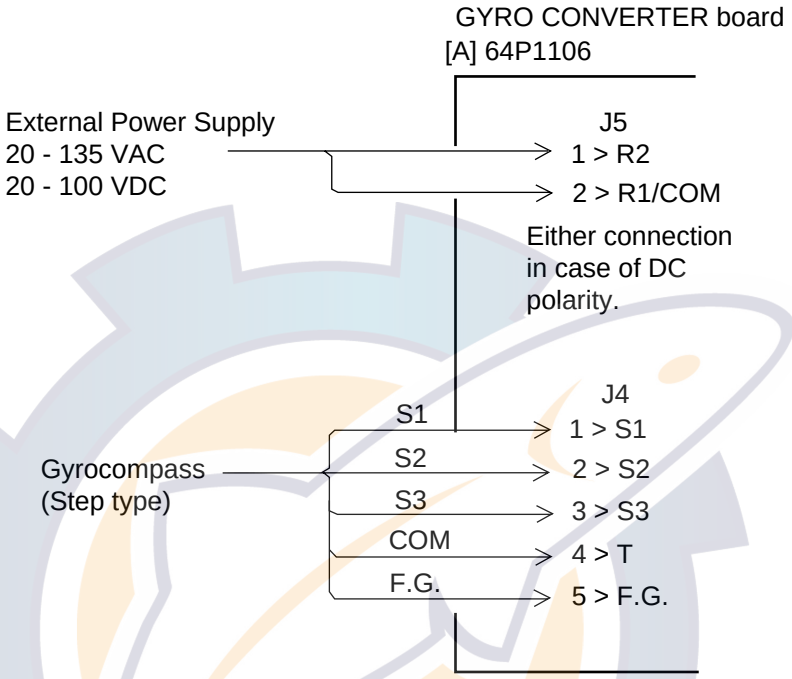

Connection of external power supply to GYRO CONVERTER board

DIP switch, jumper wire settings

Default setting

The gyro converter GC-10 is set at the factory for connection with the gyrocompass specifications below.

AC synchronous signal:	50/60 Hz
Rotor voltage:	60 V to 135 V AC
Stator voltage:	60 V to 135 V AC
Gear ratio:	360x
Supply voltage:	30 V to 135 V AC

If the specifications of the gyrocompass differ from those mentioned above, change jumper wire and DIP switch settings on the GYRO CONVERTER board. Settings may be changed according to gyrocompass specifications (see page 4-6) or make and model of gyrocompass (see page 4-7). For the location of DIP switches and jumper wires, see page 4-8.

Note: If you change the setting with the power turned on, set #8 of SW2 from OFF to ON, then OFF again to effect changes.

www.reelschematic.com

Setting method 1: DIP switch settings and gyrocompass specifications

1) Gyrocompass type

Gyrocompass type	SW 1-4	SW 1-5	SW 1-6	JP1
AC synchronous	OFF	OFF	OFF	#1, #2, #3
DC synchronous	OFF	OFF	OFF	#2, #3, #4
DC step	ON	OFF	OFF	#4, #5, #6
Full-wave pulsating current	OFF	ON	OFF	#4, #5, #6
Half-wave pulsating current	ON	ON	OFF	#4, #5, #6

2) Frequency

Frequency	SW 1-7	SW 1-8	Remarks
50/60 Hz	OFF	OFF	AC synchronous-pulsating current
400 Hz	ON	OFF	AC synchronous-pulsating current
500 Hz	OFF	ON	AC synchronous-pulsating current
DC	ON	ON	DC synchronous DC step

3) Rotor voltage (between R1 & R2)

Rotor Voltage	SW2-1	JP3
20 to 45 VAC	ON	#2
30 to 70 VAC	OFF	#2
40 to 90 VAC	ON	#1
60 to 135 VAC	OFF	#1

4) Stator voltage (between S1 & S2)

Stator Voltage	SW2-2	SW2-3	JP2
20 to 45 VAC, or 20 to 60 VDC	ON	OFF	#2
30 to 70 VAC, or 40 to 100 VDC	OFF	OFF	#2
40 to 90 VAC	ON	OFF	#1
60 to 135 VAC	OFF	OFF	#1

5) Ratio

Ratio	SW1-1	SW1-2	SW1-3
360X	OFF	OFF	OFF
180X	ON	OFF	OFF
90X	OFF	ON	OFF
36X	ON	ON	OFF

6) Supply voltage

Stator Voltage	JP4	JP5
20 to 45 VAC, or 20 to 60 VDC	#2	#2
30 to 70 VAC, or 40 to 100 VDC	#1	#1

7) AD-10 format data

Select data Tx interval for ports 1 to 6 with jumper wires JP6 and JP7. The Tx interval is available in 25 msec or 200 msec. Use 25 msec for radar.

8) NMEA-0183 Tx interval and output sentence

Tx interval	SW 2-5	SW 2-6	Output sentence
1 s	OFF	OFF	HDT+VHW
200 ms	ON	OFF	HDT
100 ms	OFF	ON	HDT
25 ms	ON	ON	HDT

9) NMEA-0183 Version no.

Version no.	SW3-1
1.5	OFF
2.0	ON

10) NMEA-0183 baud rate

Baud rate	SW3-2
4800 bps	OFF
38400 bps	ON

11) Power fail detection

Talker	SW3-3
Disable	OFF
Enable	ON

(Use OFF for radar only)

12) Stator signal loss detection

Detection	SW2-7
Yes	OFF
No	ON

SW2-4: factory use only
SW3-4: not used

After setting jumpers and DIP switches, reset the power or set SW2-8 to “CPU”.

www.reelschematic.com

Setting method 2: by make and model of gyrocompass

Maker	Models	Specification	SW 1-1	SW 1-2	SW 1-3	SW 1-4	SW 1-5	SW 1-6	SW 1-7	SW 1-8	SW 2-1	SW 2-2	SW 2-3	JP1	JP2	JP3	JP4	JP5
Anschutz	Standard 2,3	AC synchronous 50/60Hz Rotor voltage: 50/60V Stator voltage: 22V 360x	OFF	OFF	OFF	OFF	OFF	OFF	OFF	OFF	OFF	ON	OFF	#1, #2,#3	#2	#2	#1	#
	Standard 4,6	AC synchronous 50/60Hz Rotor voltage: 50/60V Stator voltage: 90V 360x	OFF	OFF	OFF	OFF	OFF	OFF	OFF	OFF	OFF	OFF	OFF	#1, #2,#3	#2	#1	#1	#
	Standard 20	DC step 35V 180x COM(-) ,3-wire(+)	ON	OFF	OFF	ON	OFF	OFF	ON	ON	-	ON	OFF	#4, #5,#6	#2	-	#2	#
Yokogawa Navtec (Plath type)	C-1/1A/2/3 A-55, B-55	AC synchronous 50/60Hz Rotor voltage: 50/60V Stator voltage: 22V 360x	OFF	OFF	OFF	OFF	OFF	OFF	OFF	OFF	OFF	ON	OFF	#1, #2,#3	#2	#2	#1	#
	CMZ-700	DC step 24V 180x COM(+), 3-wire(-)	ON	OFF	OFF	ON	OFF	OFF	ON	ON	-	ON	OFF	Remo-ve	#2	-	*	*
	CMZ-250X/ 300X/500	DC synchronous 360x	OFF	OFF	OFF	OFF	OFF	OFF	ON	ON	-	ON	OFF	Remo-ve	#2	-	*	*
		DC step 35V 180x COM(+),3-wire(-)	ON	OFF	OFF	ON	OFF	OFF	ON	ON	-	ON	OFF	#4, #5,#6	#2	-	#2	#2
	CMZ-100/200/ 300 C-1Jr,D-1Z/1/3 IPS-2/3	AC synchronous 50/60Hz Rotor voltage: 100V Stator voltage: 90V 360x	OFF	OFF	OFF	OFF	OFF	OFF	OFF	OFF	OFF	OFF	OFF	#1, #2,#3	#1	#1	#1	#1
	CMZ-50 See note below.	step 35V 180x COM(+),3-wire(-)	ON	OFF	OFF	ON	OFF	OFF	ON	ON	-	ON	OFF	Remo-ve	#2	-	*	*
Plath	NAVGAT II/III	AC synchronous 50/60Hz Rotor voltage: 50/60V Stator voltage: 68V 360x	OFF	OFF	OFF	OFF	OFF	OFF	OFF	OFF	OFF	OFF	OFF	#1, #2,#3	#2	#2	#1	#1
Tokimec (Sperry type)	ES-1/2/11 GLT-101/102/ 103/106K/107	AC synchronous 50/60Hz Rotor voltage: 100/110V Stator voltage: 90V 36x	ON	ON	OFF	OFF	OFF	OFF	OFF	OFF	OFF	OFF	OFF	#1, #2,#3	#1	#1	#1	#1
	ES-11A/110 TG-200 PR222R/2000 PR237L/H GM 21	AC synchronous 50/60Hz Rotor voltage: 100/110V Stator voltage: 22V 90x	OFF	ON	OFF	OFF	OFF	OFF	OFF	OFF	OFF	OFF	OFF	#1, #2,#3	#1	#1	#1	#1
	MK-14 MOD-1/2/T NK-EN,NK-EI	DC step 70V 180x COM(-), 3-wire(+)	ON	OFF	OFF	ON	OFF	OFF	ON	ON	-	OFF	OFF	#4, #5,#6	#2	-	#1	#1
	SR-130/140	DC step 70V 180x 5-wire, open collector	ON	OFF	OFF	OFF	ON	OFF	OFF	OFF	-	OFF	OFF	#4, #5,#6	#2	-	#1	#1
	TG-100/5000 PR-357/130/ 140, ES-17 GLT-201/202 /203	DC step 70V 180x COM(+), 3-wire(-)	ON	OFF	OFF	ON	OFF	OFF	ON	ON	-	OFF	OFF	#4, #5,#6	#2	-	#1	#1
	TG-6000	DC step 24V 180x	ON	OFF	OFF	ON	OFF	OFF	ON	ON	-	ON	OFF	#4, #5,#6	#2	-	#2	#2
	GM-11	AC synchronous 50/60Hz Rotor voltage: 100V Stator voltage: 90V 90x	OFF	ON	OFF	OFF	OFF	OFF	OFF	OFF	OFF	OFF	OFF	#1, #2,#3	#1	#1	#1	#1
	SR-120,ES-16 MK-10/20/30	DC step 35V 180x	ON	OFF	OFF	ON	OFF	OFF	ON	ON	-	ON	OFF	#4, #5,#6	#2	-	#2	#2
Kawasaki	GX-81	AC synchronous 50/60Hz Rotor voltage: 100/110V Stator voltage: 90V 90x	OFF	ON	OFF	OFF	OFF	OFF	OFF	OFF	OFF	OFF	OFF	#1, #2,#3	#1	#1	#1	#1
Armabrown	MK-10,MKL-1 SERIES1351, MOD-4	DC step 50V 180x COM(+), 3-wire(-)	ON	OFF	OFF	ON	OFF	OFF	ON	ON	-	OFF	OFF	#4, #5,#6	#2	-	#1	#1
Robertson	SKR-80	DC step 35V 180x COM(-), 3-wire(+)	ON	OFF	OFF	ON	OFF	OFF	ON	ON	-	ON	OFF	#4, #5,#6	#2	-	#2	#2

*: Set JP4 and JP5 according to the voltage of the external power supply.

Note: If CMZ-50 has 35 VDC, set JP1 to #4, #5, #6.

www.reelschematic.com

Location of DIP switches, jumper wires on the GYRO CONVERTER board

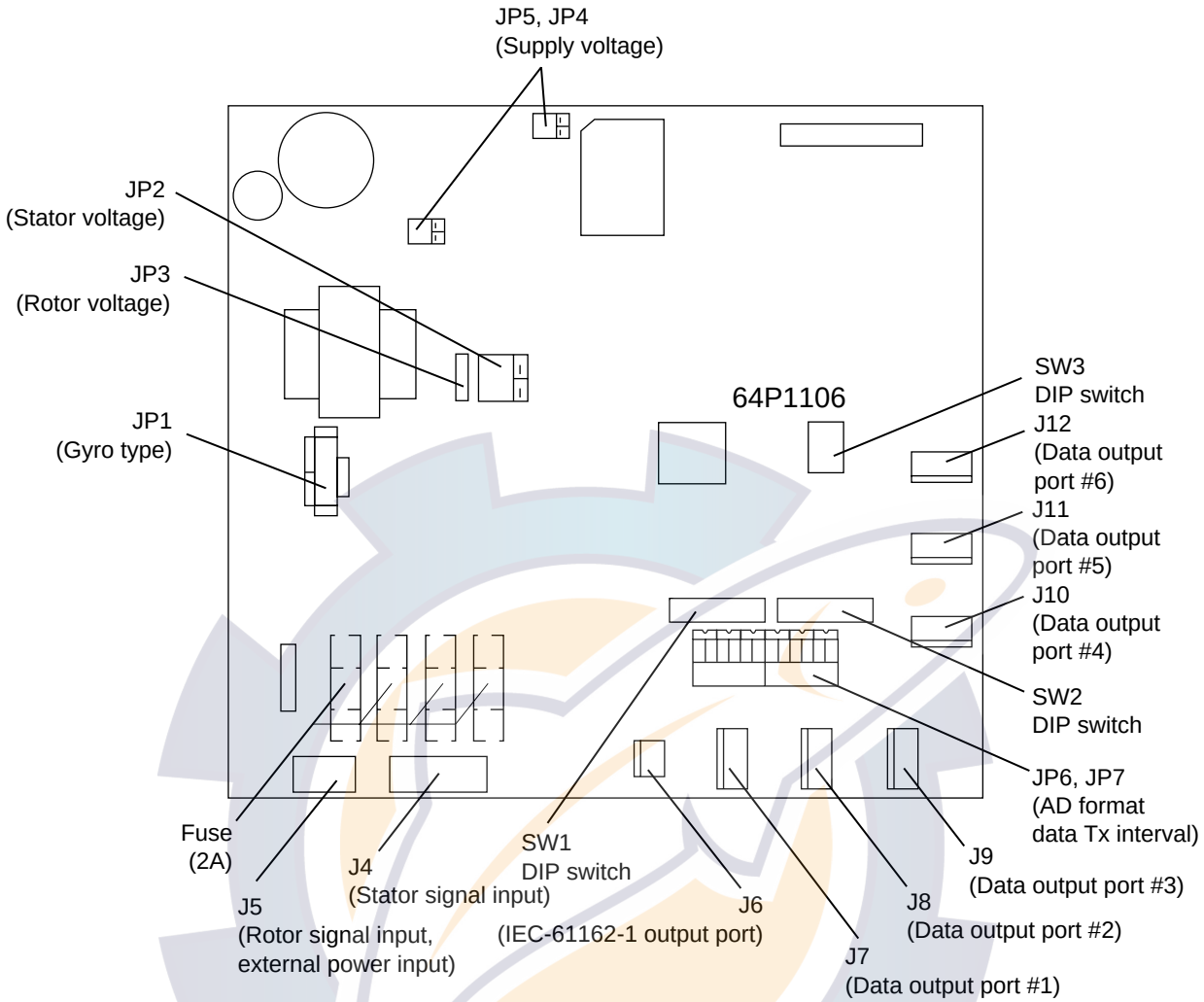

GYRO CONVERTER board

www.reelschematic.com

Setting the heading readout on the radar display

Confirm that the gyrocompass is giving a reliable readout. Then, set the heading readout on the radar display with the gyrocompass readout as follows:

1. Right-click the HDG box at the top right corner on the screen.

```
[HDG MENU]

1  HDG SOURCE
   AD-10/SERIAL
2  GC-10 SETTING
   000.0°
```

HDG menu

2. Spin the thumbwheel to choose 1 HDG SOURCE and push the left button.
3. Spin the thumbwheel to choose AD-10 and push the left button.
4. Spin the thumbwheel to choose 2 GC-10 SETTING and push the left button.
5. Spin the thumbwheel to set gyrocompass reading and push the left button.
6. Push the right button close the menu.

www.reelschematic.com

4.2 Memory Card Interface Unit

Mounting considerations

When selecting a mounting location, observe the following points:

- Locate the unit away from heat sources because of heat that can build up inside the cabinet.
- Locate the unit away from places subject to water splash and rain.
- Leave sufficient space at the sides and rear of the unit to facilitate maintenance.
- A magnetic compass will be affected if the unit is placed too close to the magnetic compass. Observe the compass safe distances on page ii to prevent interference to a magnetic compass.

Mounting procedure

Flush mounting

This unit can be flush-mounted in a panel with the standard installation materials.

1. Prepare a cutout in the mounting location, referring to the outline drawing at the end of this manual.
2. Screw in the threaded rods to the flange on the front panel of the unit securely by hands.
3. Set the unit to the cutout.
4. Insert the flat washer, spring washer and nut in that order for each rod and fasten the nuts.

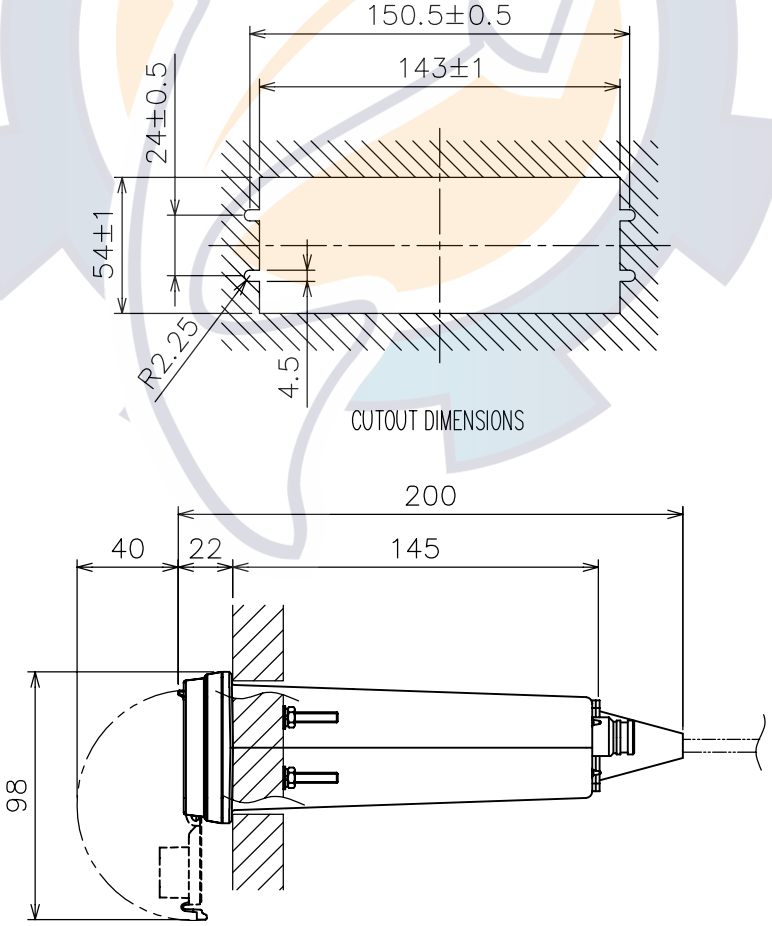

Flush mounting dimensions for memory card interface unit

www.reelschematic.com

Desktop mount

Requires the optional desktop mount kit FP03-10201. Refer to the packing list at the back of this manual for further information about this kit.

1. Fix the mounting bracket 19-023-3081 to the unit with four screws.
2. Mount the above assembly on a desktop with four self-tapping screws.

Connections

One memory card IF unit and one processor unit

Connect as shown below.

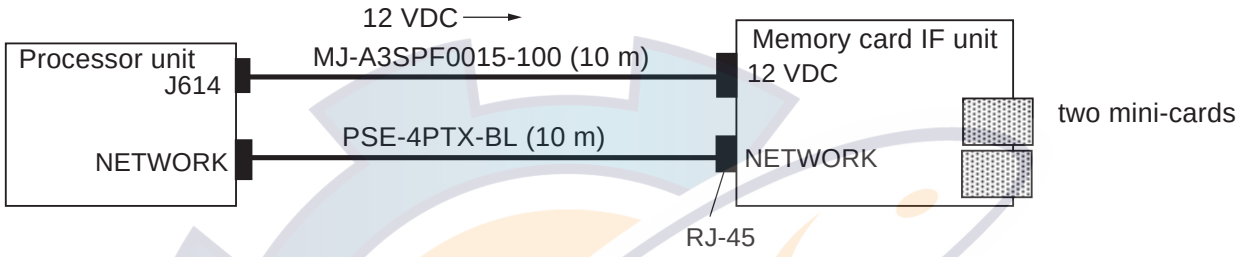

Connections for one memory card interface unit

One memory card IF unit and multiple processor units

Prepare optional armored LAN cable kit and Switching Hub HUB-100. Connect as shown below.

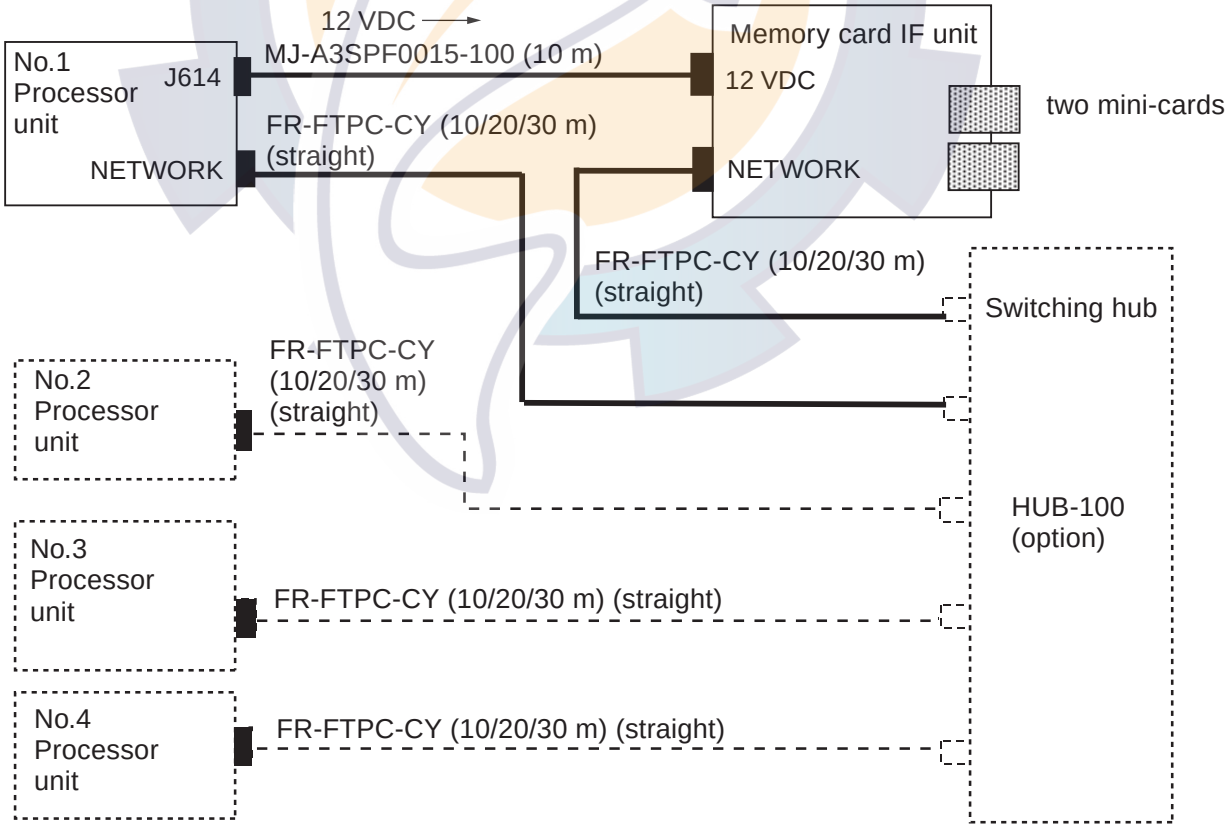

Connecting one memory card interface unit and multiple processor units via switching hub

www.reelschematic.com

it

Armored LAN cable kit

Type	Code No.	Contents
OP03-28900	000-082-658	Cable FR-FTPC-CY (10 m), Modular connector (2 pcs.)
OP03-28910	000-082-689	Cable FR-FTPC-CY (20 m), Modular connector. (2 pcs.)
OP03-28920	000-082-660	Cable FR-FTPC-CY (30 m), Modular connector (2 pcs.)

Note: When two memory card interface units are connected via a network, change ID code for the second unit.

1. Remove the cover and set the IP0 bit of the DIP switch S1 on the CARDCPU board (03P9333) to ON.
2. Set INIT bit of S1 to ON and turn on the radar. Wait until CR2 starts blinking. DO NOT turn off the power until CR2 starts blinking.
3. Turn off the power and set INIT bit to OFF.

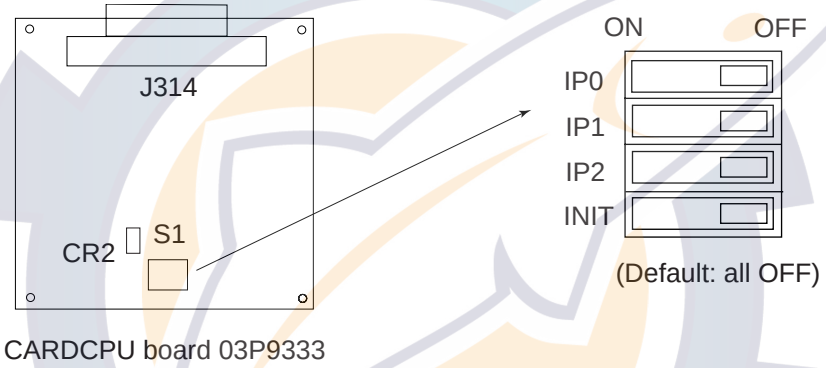

Memory card interface unit, showing location of DIP switch S1

www.reelschematic.com

4.3 DVI-RGB Conversion Kit

This information provides the procedure necessary for the installation of the DVI-RGB conversion kit. This kit is installed in the processor unit to enable connection of an RGB monitor or VDR (Voyage Data Recorder).

Name: DVI-RGB conversion kit
Type: OP03-180-2
Code no.: 008-536-070

See packing list for contents. Refer to the figure below for modification.

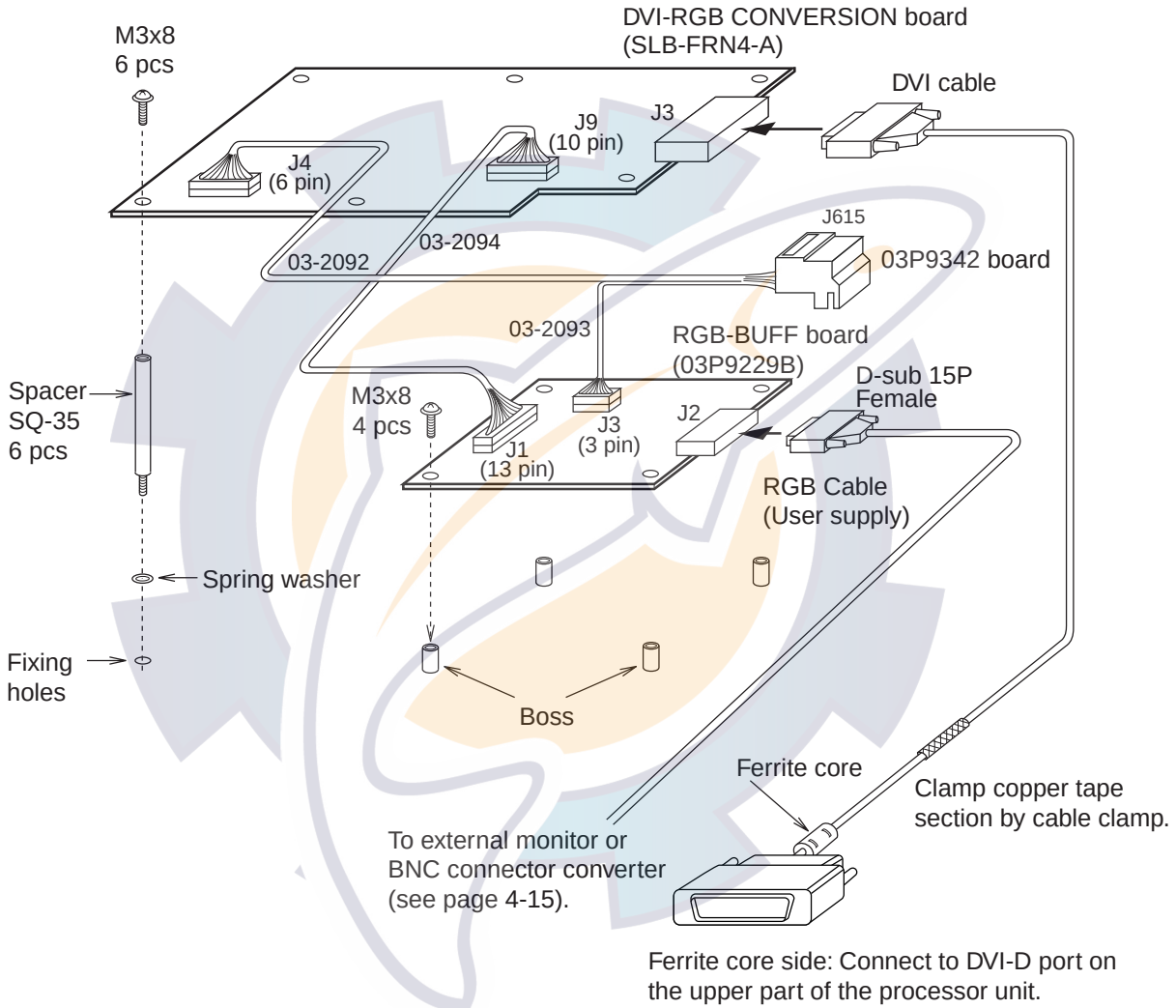

How to wire the DVI-RBG conversion board

www.reelschematic.com

1. Remove the top cover and open the upper part of the processor unit.

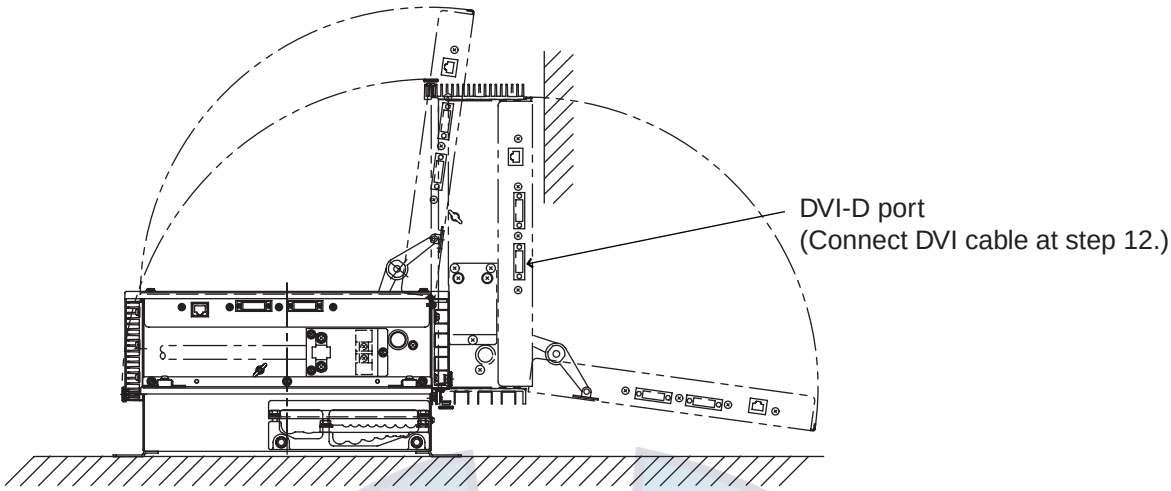

Processor unit, side view

2. Fix the RGB-BUFF board (03P9229B board) with four screws. (See the figure below.)
3. Attach the connector assemblies to J1 and J3 on the 03P9229B board as follows.
   J1: 13-pin connector of the connector assembly 03-2094
   J3: 3-pin connector of the connector assembly 03-2093
4. Attach six sets of spring washers and spacers at the locations shown below.

Processor unit (bottom chassis)

www.reelschematic.com

5. Attach the DVI-RGB CONVERSION board to the location shown below.

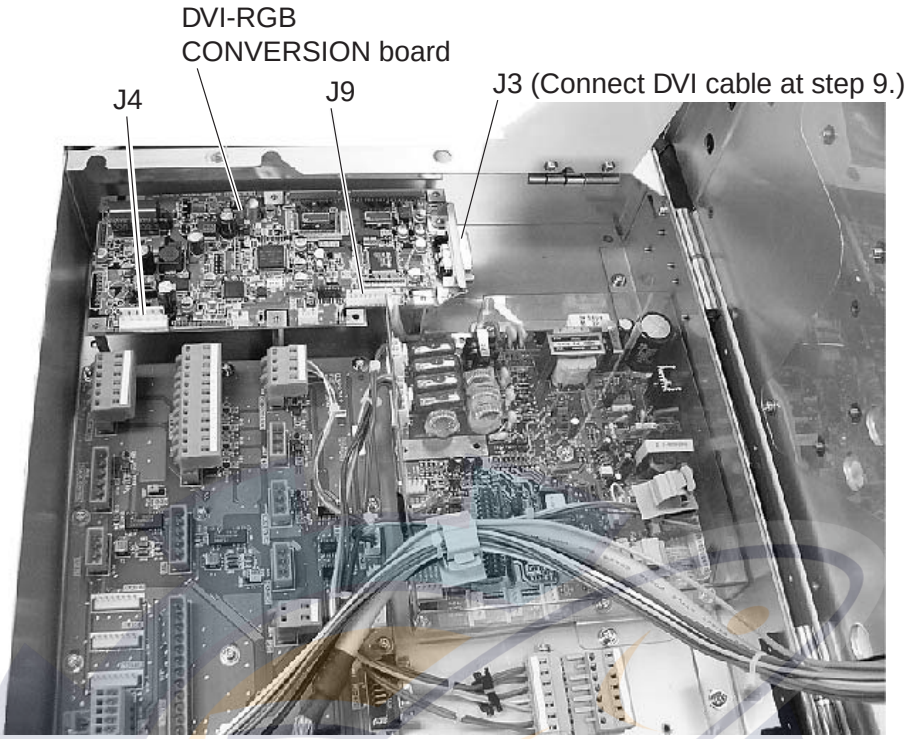

Fixing the DVI-RGB conversion board inside the processor unit

6. Attach the 10-pin connector from J1 on the 03P9229B board to J9 on the DVI-RGB board.
7. Attach the connector assembly 03-2092 to J4 on the DVI-RGB CONVERSION board.
8. Remove connector housing J615 from the 03P9342 board. Connect the cable from J3 on the 03P9229B board and the cable from J4 on the DVI-RGB CONVERSION board to J615. Attach J615 to the 03P9342 board.
   To connect wires to the WAGO connector, use the terminal opener (supplied as installation materials) as shown below.

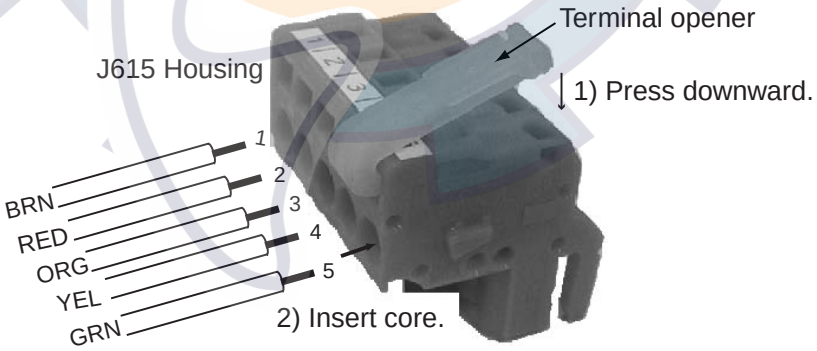

Connecting wires to the housing

9. Connect the DVI cable to J3 on the DVI-RGB CONVERSION board. Connect the end that <u>does not</u> have the ferrite core.
10. Pass an RGB cable (local supply) through the cable clamp and connect it to J2 on the 03P9229B board.
11. Pass the DVI cable through the cable clamp, laying the section with copper tape in the cable clamp.
12. Assemble the processor unit and connect the other end of the DVI cable to the DVI-D port.

www.reelschematic.com

4.4 BNC Connector Converter

To connect the FURUNO Voyage Data Recorder VR-5000 to this radar, the DVI-RGB conversion kit (mentioned at previous paragraph) and the BNC connector converter are required. Also VGA cable (between the processor unit and the BNC connector converter) and five 75 ohm coaxial cables (between the BNC connector converter and VR-5000) are required.

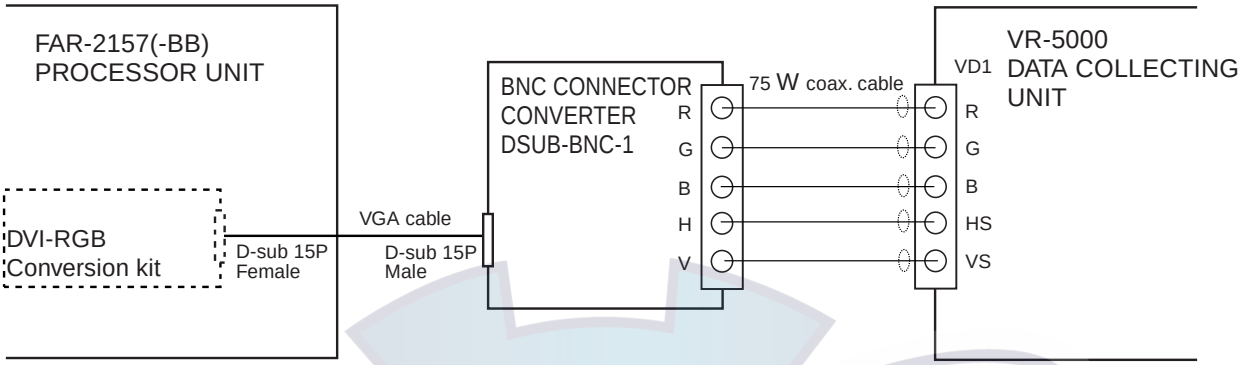

Connecting VR-5000 to FAR-2157(-BB) via BNC connector converter

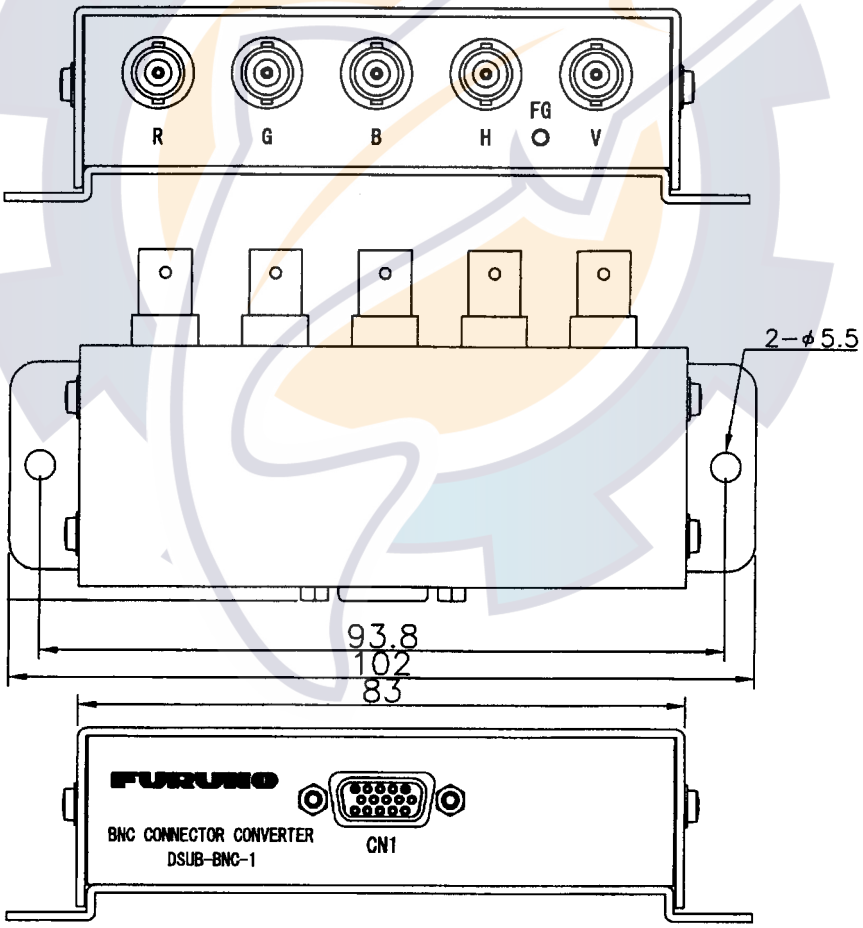

BNC connnector converter

www.reelschematic.com

5. IO DATA

Available input and output data are shown in the tables below and input and output sentences are shown on the next page.

Note: This radar accepts position data fixed by WGS-84 geodetic datum only. Set the datum to WGS-84 on the EPFS (GPS, etc.) connected to this radar. If other type of datum is input, the error message "DATUM" appears and the AIS feature is inoperative.

Input

Data	Specifications	Contents	Remarks
Heading signal	Synchro or step	GC-10 required	Switching between AD-10 and IEC 61162 is done from menu.
	AD-10 format	External AD-100	
	IEC 61162-2		
Speed signal	IEC 61162-1		
Navigator data	IEC 61162-1	Position, course, speed, LORAN-C TD, waypoint, route, time, wind speed and direction, current data, depth, water temperature, roll, pitch, ROT	
External radar signal	Heading, Bearing, Trigger, Video	No GAIN, STC control	Operate as remote display
Alarm ACK input	Contact closure signal		Input signal from alarm system
Track Control unit	RS-422		Option

Output

Data	Specifications	Contents	Remarks
Radar system data	RS-232C	RSD, OSD, TLL	For PC plotter
ARPA data	IEC 61162-1	TTM	For ECDIS
Remote display signal	Heading, Bearing, Tx Trigger, Video		2 ports
External LCD monitor signal	DVI	Same as main monitor unit	2 systems max.
External CRT monitor signal	R, G, B, H, V	Same as main monitor unit	Option
Alarm signal	Contact closure signal	Output to alarm system by using photo-relay	4 outputs, output content selected from menu.

www.reelschematic.com

IEC 61162 input sentence and priority

Item	Sentence and order of priority
Speed (STW)	VBW>VHW
Speed (SOG	VBW
Speed (position)	VTG>RMC
Heading (True)	HDT*
Position	GGA>GLL>RMC>RMA
Waypoint	BWR>BWC>RMB
Date	ZDA
Depth	DPT>DBT>DBS
Water temperature	MTW
Wind	MWV

IEC 61162 output sentence

Item	Sentence
Target L/L	TLL (Not on IMO radar)
Radar system data	RSD
Own ship data	OSD
ARPA target data	TTM

HDT is IEC61162-2, all other sentences are IEC61162-1 ed2.

PACKING LIST

03GX-X-9851 -0 1/1

RSB-106-083-S/RSB-107-083-S

NAME	OUTLINE	DESCRIPTION/CODE No.	Q'TY
ユニット UNIT			
空中線本体部組品 ANTENNA DRIVE UNIT	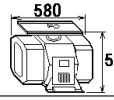	RSB-106-083-S/RSB-107-083-S 000-090-655-00 **	1
予備品 SPARE PARTS			
予備品 SPARE PARTS		SP03-09203 008-424-380-00	1
工事材料 INSTALLATION MATERIALS			
工事材料 INSTALLATION MATERIALS		CP03-31301 008-572-970-00	1

ｺｰﾄﾞ番号末尾の[**]は、選択品の代表ｺｰﾄﾞを表します。
CODE NUMBER ENDING WITH "**" INDICATES THE CODE NUMBER OF REPRESENTATIVE MATERIAL.

型式/ｺｰﾄﾞ番号が2段の場合、下段より上段に代わる過渡期品であり、どちらかが入っています。 なお、品質は変わりません。

TWO TYPES AND CODES MAY BE LISTED FOR AN ITEM. THE LOWER PRODUCT MAY BE SHIPPED IN PLACE OF THE UPPER PRODUCT. QUALITY IS THE SAME.

（略図の寸法は、参考値です。 DIMENSIONS IN DRAWING FOR REFERENCE ONLY.）

03GX-X-9851

PACKING LIST XN4A*

03BE-X-9852-1 1/1

NAME	OUTLINE	DESCRIPTION/CODE No.	Q'TY
ユニット UNIT			
ｱﾝﾃﾅ ANTENNA		XN4A 008-324-130**	1
ﾌｨｰﾄﾞ導波管 WAVEGUIDE	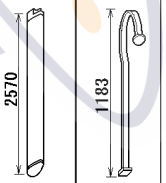	XN4A 008-321-270	1
ｱﾝﾃﾅ工材 ANTENNA INSTALLATION MATERIALS XN4A			
導波管間座 WAVEGUIDE PACKING	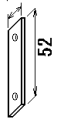	03-003-4003 300-340-030	1
OﾘﾝｸﾞO-RING	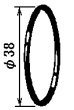	AS568-125 1115-70 000-851-840	2
線材加工品 GROUNDING WIRE	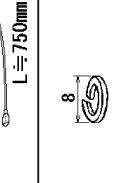	FR-700/1000/1200 008-162-720	1
ﾊﾞﾈ座金 SPRING WASHER		M4 SUS304 000-864-256	2
ﾐｶﾞｷ平座金 FLAT WASHER		M4 SUS304 000-864-126	2
六角ﾎﾞﾙﾄ ｽﾘﾜﾘ HEX. BOLT (SLOTTED WASHER HEAD)	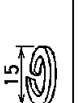	M4X16 SUS304 000-882-042	8
六角ﾎﾞﾙﾄ ｽﾘﾜﾘ HEX. BOLT	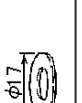	M4X30 SUS304 000-862-116	2
六角ﾅｯﾄ 1種 HEX. NUT	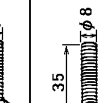	M8 SUS304 000-863-110	4
ﾊﾞﾈ座金 SPRING WASHER		M8 SUS304 000-864-262	8
ﾐｶﾞｷ平座金 FLAT WASHER		M8 SUS304 000-864-130	12
六角ﾎﾞﾙﾄ ｽﾘﾜﾘ HEX. BOLT		M8X30 SUS304 000-862-151	4
六角ﾎﾞﾙﾄ ｽﾘ割り HEX. BOLT (SLOTTED HEAD)		M8X35 SUS304 000-862-153	4
導波管押さえ1.E型 WAVEGUIDE CLAMP		RSB-2006-2 360-220-062	1
ｹﾐｼｰﾙ SILICON RUBBER		S-8400W ﾁｭｰﾌﾞ50G 000-158-483	1

ｺｰﾄﾞ番号末尾の[**]は、選択品の代表型式/ｺｰﾄﾞを表します。
CODE NUMBER ENDING WITH "**" INDICATES THE CODE NUMBER OF REPRESENTATIVE MATERIAL.

（略図の寸法は、参考値です。 DIMENSIONS IN DRAWING FOR REFERENCE ONLY.）

03BE-X-9852

www.reelschematic.com

www.reelschematic.com

A-4

FURUNO

工事材料表
INSTALLATION MATERIALS

CODE NO. 008-572-970-00 | 03GX-X-9401 -0
TYPE CP03-31301 | 1/2

番号 NO.	名称 NAME	略図 OUTLINE	型名／規格 DESCRIPTIONS	数量 Q'TY	用途／備考 REMARKS
1	ｼｰﾙﾜｯｼｬ SEAL WASHER	φ30	03-001-3002-0 / CODE NO. 300C-130-020-00	4	
2	防蝕ｺﾞﾑ CORROSION-PROOF RUBBER MAT	450, 80, t=1	03-029-0301-2 / CODE NO. 100-091-112-00	2	
3	操作ﾊﾞｰ TERMINAL OPENER	20	231-131 / CODE NO. 000-808-981-00	1	
4	圧着端子 CRIMP-ON LUG	21, 9	FV2-4 ﾏｶ / CODE NO. 000-538-118-00	6	
5	圧着端子 CRIMP-ON LUG	26, 10	FV5.5-4 / CODE NO. 000-538-123-00	1	
6	ﾊﾞﾈ座金 SPRING WASHER	22	M12 SUS304 / CODE NO. 000-864-263-00	4	
7	ﾐｶﾞｷ平座金 FLAT WASHER	φ24	M12 SUS304 / CODE NO. 000-864-132-00	4	
8	六角ﾅｯﾄ 1種 HEX. NUT	10, 19	M12 SUS304 / CODE NO. 000-863-112-00	4	
9	六角ﾎﾞﾙﾄ（全ﾈｼﾞ） HEX. BOLT	60, φ12	M12X60 SUS304 / CODE NO. 000-862-191-00	4	
10	六角ﾅｯﾄ 1種 HEX. NUT	5, 10	M6 SUS304 / CODE NO. 000-158-856-10	1	

型式/コード番号が2段の場合、下段より上段に代わる過渡期品であり、どちらかが入っています。 なお、品質は変わりません。

TWO TYPES AND CODES MAY BE LISTED FOR AN ITEM. THE LOWER PRODUCT MAY BE SHIPPED IN PLACE OF THE UPPER PRODUCT. QUALITY IS THE SAME.

（略図の寸法は、参考値です。 DIMENSIONS IN DRAWING FOR REFERENCE ONLY.）

03GX-X-9401

FURUNO ELECTRIC CO., LTD

A-3

PACKING LIST XN5A*

03BE-X-9853-1 1/1

ﾕﾆｯﾄ UNIT

NAME	OUTLINE	DESCRIPTION/CODE No.	Q'TY
ｱﾝﾃﾅ ANTENNA	3210	XN5A / 008-422-940**	1
ｱﾝﾃﾅ導波管 WAVEGUIDE	1498	XN5A / 008-422-950	1

ｱﾝﾃﾅ工材 ANTENNA INSTALLATION MATERIALS

NAME	OUTLINE	DESCRIPTION/CODE No.	Q'TY
導波管間座 WAVEGUIDE PACKING	16, 52	03-003-4003 / 300-340-030	1
Oﾘﾝｸﾞ O-RING	φ38	AS568-125 1115-70 / 000-851-840	2
ﾊﾞﾈ座金 SPRING WASHER	8	M4 SUS304 / 000-864-256	2
ﾐｶﾞｷ座金 FLAT WASHER	φ9	M4 SUS304 / 000-864-126	2
ﾌﾞﾗｲﾝﾄﾞﾎﾞﾙﾄ HEX. BOLT(SLOTTED WASHER HEAD)	16, φ4	M4X16 SUS304 / 000-882-042	8

ｺｰﾄﾞ番号末尾の[**]は、選択品の代表型式/ｺｰﾄﾞを表します。
CODE NUMBER ENDING WITH "**" INDICATES THE CODE NUMBER OF REPRESENTATIVE MATERIAL.

（略図の寸法は、参考値です。 DIMENSIONS IN DRAWING FOR REFERENCE ONLY.）

03BE-X-9853

NAME	OUTLINE	DESCRIPTION/CODE No.	Q'TY
ﾌﾞﾗｲﾝﾄﾞﾎﾞﾙﾄ HEX. BOLT	30, φ4	M4X30 SUS304 / 000-862-116	2
ﾊﾞﾈ座金 SPRING WASHER	15	M8 SUS304 / 000-864-262	8
ﾐｶﾞｷ座金 FLAT WASHER	φ17	M8 SUS304 / 000-864-130	12
六角ﾅｯﾄ 1種 HEX. NUT	7, 13	M8 SUS304 / 000-863-110	4
六角ﾎﾞﾙﾄ ﾌﾗｲﾗｲﾝﾄﾞ HEX. BOLT	25, φ8	M8X25 SUS304 / 000-862-149	4
六角ﾎﾞﾙﾄ ﾌﾗｲﾗｲﾝﾄﾞ HEX. BOLT	30, φ8	M8X30 SUS304 / 000-862-151	4
導波管押さえ1. E型 WAVEGUIDE CLAMP	52, 16, 21	RSB-2006-2 / 360-220-062	1
ｼﾘｺｰﾝ SILICON RUBBER	135	S-8400W ﾌﾞﾗｯｸｸﾞﾚｰ 50G / 000-158-483	1

FURUNO

CODE NO.	008-572-970-00	03GX-X-9401 -0
TYPE	CP03-31301	2/2

工事材料表

INSTALLATION MATERIALS

番号 NO.	名称 NAME	略図 OUTLINE	型名／規格 DESCRIPTIONS		数量 Q'TY	用途／備考 REMARKS
11	ﾊﾞﾈ座金 SPRING WASHER		M6 SUS304	CODE NO. 000-158-855-10	1	
12	ﾐｶﾞｷ平座金 FLAT WASHER		M6 SUS304	CODE NO. 000-158-854-10	3	
13	六角ﾎﾞﾙﾄ HEX.BOLT	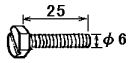	M6X25 SUS304	CODE NO. 000-862-180-00	1	
14	ｱｰｽ線 GROUNDING WIRE		RW-4747-1 03S4747-2	CODE NO. 000-566-000-01	1	

型式/ｺｰﾄﾞ番号が２段の場合、下段より上段に代わる過渡期品であり、どちらかが入っています。　なお、品質は変わりません。

TWO TYPES AND CODES MAY BE LISTED FOR AN ITEM. THE LOWER PRODUCT MAY BE SHIPPED IN PLACE OF THE UPPER PRODUCT.
QUALITY IS THE SAME.

（略図の寸法は、参考値です。　DIMENSIONS IN DRAWING FOR REFERENCE ONLY.）

03GX-X-9401

FURUNO ELECTRIC CO ., LTD

FURUNO

CODE NO.		03GL-X-9401 -3
TYPE		1/1

工事材料表

INSTALLATION MATERIALS

FAR-2117series

番号 NO.	名称 NAME	略図 OUTLINE	型名／規格 DESCRIPTIONS		数量 Q'TY	用途／備考 REMARKS
1	ｹｰﾌﾞﾙ(14C) CABLE		RW-9600 *15M*	CODE NO. 000-147-370	1	選択 TO BE SELECTED 信号ｹｰﾌﾞﾙ SIGNAL CABLE
2	ｹｰﾌﾞﾙ(14C) CABLE		RW-9600 *30M*	CODE NO. 000-149-193	1	選択 TO BE SELECTED 信号ｹｰﾌﾞﾙ SIGNAL CABLE
3	ｹｰﾌﾞﾙ(14C) CABLE		RW-9600 *40M*	CODE NO. 000-150-490	1	選択 TO BE SELECTED 信号ｹｰﾌﾞﾙ SIGNAL CABLE
4	ｹｰﾌﾞﾙ(14C) CABLE		RW-9600 *50M*	CODE NO. 000-147-373	1	選択 TO BE SELECTED 信号ｹｰﾌﾞﾙ SIGNAL CABLE

03GL-X-9401

FURUNO ELECTRIC CO ., LTD.

（略図の寸法は、参考値です。　DIMENSIONS IN DRAWING FOR REFERENCE ONLY.）

www.reelschematic.com

FURUNO

CODE NO.	008-424-380-00	03DZ-X-9303 -7 1/1
TYPE	SP03-09203	BOX NO. P

SHIP NO.	SPARE PARTS LIST FOR	U S E	SETS PER VESSEL

ITEM NO.	NAME OF PART	OUTLINE	DWG. NO. OR TYPE NO.	QUANTITY WORKING PER SET	QUANTITY WORKING PER VES	QUANTITY SPARE	REMARKS/CODE NO.
1	ｶｰﾎﾞﾝﾌﾞﾗｼ CARBON BRUSH	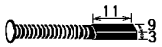	T-A01297B	4		4	000-115-023-00

MFR'S NAME	FURUNO ELECTRIC CO.,LTD.	DWG NO.	03DZ-X-9303	1/1

（略図の寸法は、参考値です。 DIMENSIONS IN DRAWING FOR REFERENCE ONLY.）

型式/ｺｰﾄﾞ番号が２段の場合、下段より上段に代わる過渡期品であり、どちらかが入っています。 なお、品質は変わりません。

TWO TYPES AND CODES MAY BE LISTED FOR AN ITEM. THE LOWER PRODUCT MAY BE SHIPPED IN PLACE OF THE UPPER PRODUCT. QUALITY IS THE SAME.

PACKING LIST

03GL-X-9855 -2 1/1

MU-201CR

NAME	OUTLINE	DESCRIPTION/CODE No.	Q'TY
ユニット UNIT			
表示部 DISPLAY UNIT	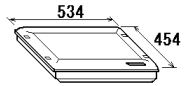	MU-201CR 000-080-288**	1
予備品 SPARE PARTS			
予備品 SPARE PARTS		SP03-03900 000-081-063	1 DC用
予備品 SPARE PARTS			
予備品 SPARE PARTS		SP03-14401 008-535-990	1 AC用
付属品 ACCESSORIES			
付属品 ACCESSORIES		FP03-09810 008-536-010	1
その他工材 OTHER INSTALLATION MATERIALS			
ｹｰﾌﾞﾙ組品 CABLE ASSY.	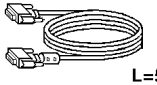	DVI-D/D SINGLELINK 5M 000-149-054	1

1.ｺｰﾄﾞ末尾に[**]の付いたﾕﾆｯﾄは代表の型式/ｺｰﾄﾞを表示しています。
DOUBLE ASTERISK DENOTES COMMONLY USED EQUIPMENT.

2.予備品は、AC用,DC用で選択願います。
CHOOSE SPARE PARTS DEPENDING ON AC OR DC POWER.

（略図の寸法は、参考値です。 DIMENSIONS IN DRAWING FOR REFERENCE ONLY.）

03GL-X-9855

www.reelschematic.com

FURUNO

CODE NO.	008-536-010-00	03GL-X-9504 -2
TYPE	FP03-09810	1/1

付属品表

ACCESSORIES

番号 NO.	名称 NAME	略図 OUTLINE	型名／規格 DESCRIPTIONS	数量 Q'TY	用途／備考 REMARKS
1	ﾊﾟﾈﾙｶﾊﾞｰ PANEL COVER	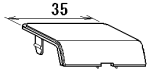	03-163-1101-1 CODE NO. 100-305-111-00	4	表示部用 FOR DISPLAY UNIT
2	ﾊﾟﾈﾙﾌｯｸ PANEL HOOK	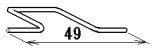	03-163-1102-0 CODE NO. 100-305-120-00	2	表示部用 FOR DISPLAY UNIT
3	+ﾄﾗｽﾀｯﾋﾟﾝﾈｼﾞ 1ｼｭ SELF-TAPPING SCREW	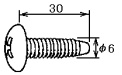	6X30 SUS304 6X30 SUS304 CODE NO. 000-162-614-10 000-802-085-00	4	表示部用 FOR DISPLAY UNIT

型式/ｺｰﾄﾞ番号が２段の場合、下段より上段に代わる過渡期品であり、どちらかが入っています。 なお、品質は変わりません。

TWO TYPES AND CODES MAY BE LISTED FOR AN ITEM. THE LOWER PRODUCT MAY BE SHIPPED IN PLACE OF THE UPPER PRODUCT. QUALITY IS THE SAME.

（略図の寸法は、参考値です。 DIMENSIONS IN DRAWING FOR REFERENCE ONLY.）

03GL-X-9504

FURUNO ELECTRIC CO ., LTD

FURUNO

CODE NO.	008-535-990	03GL-X-9303 -1 1/1
TYPE	SP03-14401	BOX NO. P

SHIP NO.	SPARE PARTS LIST FOR	U S E	SETS PER VESSEL

ITEM NO.	NAME OF PART	OUTLINE	DWG. NO. OR TYPE NO.	QUANTITY WORKING PER SET	QUANTITY WORKING PER VES	QUANTITY SPARE	REMARKS/CODE NO.
1	ﾋｭｰｽﾞ FUSE	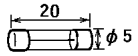	FGMB 250V 2A PBF FGMB 2A 250V			2	表示部用 FOR DISPLAY UNIT 000-157-497-10 000-122-000-00

MFR'S NAME	FURUNO ELECTRIC CO.,LTD.	DWG NO.	03GL-X-9303	1/1

（略図の寸法は、参考値です。 DIMENSIONS IN DRAWING FOR REFERENCE ONLY.）

型式/ｺｰﾄﾞ番号が２段の場合、下段より上段に代わる過渡期品であり、どちらかが入っています。 なお、品質は変わりません。

TWO TYPES AND CODES MAY BE LISTED FOR AN ITEM. THE LOWER PRODUCT MAY BE SHIPPED IN PLACE OF THE UPPER PRODUCT. QUALITY IS THE SAME.

www.reelschematic.com

www.reelschematic.com

FURUNO

工事材料表

INSTALLATION MATERIALS

AC用

CODE NO.	008-535-940	03GL-X-9405 -0
TYPE	CP03-25602	1/1

番号 NO.	名称 NAME	略図 OUTLINE	型名／規格 DESCRIPTIONS		数量 Q'TY	用途／備考 REMARKS
1	操作ﾀｰﾐﾅﾙｵｰﾌﾟﾅｰ TERMINAL OPENER	20	231-131	CODE NO. 000-808-981	1	制御部用 FOR PROCESSOR UNIT
2	操作ﾀｰﾐﾅﾙｵｰﾌﾟﾅｰ TERMINAL OPENER	19	734-230	CODE NO. 000-147-417	1	制御部用 FOR PROCESSOR UNIT
3	圧着端子 CRIMP-ON LUG	21 9	FV2-4 ｱｵ	CODE NO. 000-538-118	2	制御部用 FOR PROCESSOR UNIT

(略図の寸法は、参考値です。 DIMENSIONS IN DRAWING FOR REFERENCE ONLY.)

FURUNO ELECTRIC CO., LTD.

03GL-X-9405

PACKING LIST RPU-013

03GL-X-9858-5 1/1

NAME	OUTLINE	DESCRIPTION/CODE No.	Q'TY
ユニット UNIT			
制御部 PROCESSOR UNIT	359 353	RPU-013* 000-081-381-00 **	1
予備品 SPARE PARTS			
予備品 SPARE PARTS		SP03-14404 008-535-910-00	1 (*1)
予備品 SPARE PARTS		SP03-14405 008-535-920-00	1 (*1)
予備品 SPARE PARTS		SP03-14406 008-535-930-00	1 (*1)
工事材料 INSTALLATION MATERIALS			
工事材料 INSTALLATION MATERIALS		CP03-25602 008-535-940-00	1 (*2)
工事材料 INSTALLATION MATERIALS		CP03-25603 008-535-950-00	1 (*2)
図書 DOCUMENT			
取扱説明書 OPERATOR'S MANUAL	210 297	OM*-35190-* 000-147-452-0* **	1
取扱説明書 OPERATOR'S MANUAL	210 297	OM*-35221-* 000-164-255-0*	1 (*3)
装備要領書 INSTALLATION MANUAL	210 297	IM*-35***-* 000-147-454-0* **	1
操作要領書 OPERATOR'S GUIDE	210 297	OS*-35190-* 000-153-046-0* **	1

1.ｺｰﾄﾞ番号末尾の[**]は、選択品の代表ｺｰﾄﾞを表します。
CODE NUMBER ENDING WITH "**" INDICATES THE CODE NUMBER OF REPRESENTATIVE MATERIAL.

2.(*1)(*2)は、それぞれ仕様選択品を表します。
(*1)(*2)INDICATE SPECIFICATION SELECTIVE ITEM.

3.(*3) FAR-2157/2167DS仕様の時のみ添付されます。
SUPPLYED WITH FAR-2157/2167DS ONLY.

(略図の寸法は、参考値です。 DIMENSIONS IN DRAWING FOR REFERENCE ONLY.)

型式ｺｰﾄﾞ番号が2段の場合、下段より上段にｹｽﾞる過渡期品であり、どちらかが入っています。 なお、品質は変わりません。
TWO TYPES AND CODES MAY BE LISTED FOR AN ITEM. THE LOWER PRODUCT MAY BE SHIPPED IN PLACE OF THE UPPER PRODUCT. QUALITY IS THE SAME.

03GL-X-9858

FURUNO

CODE NO.	008-535-910	03GL-X-9305 -1 1/1
TYPE	SP03-14404	BOX NO. P

SHIP NO.	SPARE PARTS LIST FOR	U S E	SETS PER VESSEL

ITEM NO.	NAME OF PART	OUTLINE	DWG. NO. OR TYPE NO.	QUANTITY WORKING PER SET	QUANTITY WORKING PER VES	QUANTITY SPARE	REMARKS/CODE NO.
1	ﾋｭｰｽﾞ FUSE	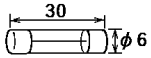	FGBO 125V 10A PBF			4	AC100用 FOR PROCESSOR UNIT 000-155-826-10

MFR'S NAME	FURUNO ELECTRIC CO.,LTD.	DWG NO.	03GL-X-9305	1/1

（略図の寸法は、参考値です。 DIMENSIONS IN DRAWING FOR REFERENCE ONLY.）

型式/ｺｰﾄﾞ番号が２段の場合、下段より上段に代わる過渡期品であり、どちらかが入っています。 なお、品質は変わりません。

TWO TYPES AND CODES MAY BE LISTED FOR AN ITEM. THE LOWER PRODUCT MAY BE SHIPPED IN PLACE OF THE UPPER PRODUCT. QUALITY IS THE SAME.

FURUNO

CODE NO.	008-535-920-00	03GL-X-9306 -1 1/1
TYPE	SP03-14405	BOX NO. P

SHIP NO.	SPARE PARTS LIST FOR	U S E	SETS PER VESSEL

ITEM NO.	NAME OF PART	OUTLINE	DWG. NO. OR TYPE NO.	QUANTITY WORKING PER SET	QUANTITY WORKING PER VES	QUANTITY SPARE	REMARKS/CODE NO.
1	ﾋｭｰｽﾞ FUSE	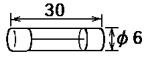	FGBO 250V 5A PBF			4	AC220用 FOR PROCESSOR UNIT 000-155-840-10

MFR'S NAME	FURUNO ELECTRIC CO.,LTD.	DWG NO.	03GL-X-9306	1/1

（略図の寸法は、参考値です。 DIMENSIONS IN DRAWING FOR REFERENCE ONLY.）

型式/ｺｰﾄﾞ番号が２段の場合、下段より上段に代わる過渡期品であり、どちらかが入っています。 なお、品質は変わりません。

TWO TYPES AND CODES MAY BE LISTED FOR AN ITEM. THE LOWER PRODUCT MAY BE SHIPPED IN PLACE OF THE UPPER PRODUCT. QUALITY IS THE SAME.

www.reelschematic.com

PACKING LIST

03GX-X-9852 -0 1/1

PSU-006

NAME	OUTLINE	DESCRIPTION/CODE No.	Q'TY
ユニット UNIT			
電源制御部 POWER CONTROL UNIT	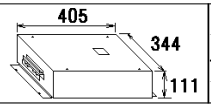	PSU-006-*-* 000-090-665-00 **	1
予備品 SPARE PARTS			
予備品 SPARE PARTS		SP03-15501 008-572-730-00	1 (*1)
予備品 SPARE PARTS		SP03-15502 008-572-740-00	1 (*1)
工事材料 INSTALLATION MATERIALS			
工事材料 INSTALLATION MATERIALS		CP03-31401 008-572-750-00	1

(*1)の予備品は,仕様によりAC100用:SP03-15501,AC220用:SP03-15502.
*1 : SELECT ONE ACCORDING TO PROCESSOR UNIT'S SPECIFICATIONS : SP03-15501 FOR 100VAC OR SP03-15502 FOR 220VAC

型式/ｺｰﾄﾞ番号が2段の場合、下段より上段に代わる過渡期品であり、どちらかが入っています。 なお、品質は変わりません。

TWO TYPES AND CODES MAY BE LISTED FOR AN ITEM. THE LOWER PRODUCT MAY BE SHIPPED IN PLACE OF THE UPPER PRODUCT. QUALITY IS THE SAME.

(略図の寸法は、参考値です。 DIMENSIONS IN DRAWING FOR REFERENCE ONLY.)

03GX-X-9852

FURUNO

CODE NO.	008-572-750-00	03GX-X-9402 -0
TYPE	CP03-31401	1/1

工事材料表

INSTALLATION MATERIALS

番号 NO.	名称 NAME	略図 OUTLINE	型名／規格 DESCRIPTIONS	数量 Q'TY	用途／備考 REMARKS
1	圧着端子 CRIMP-ON LUG	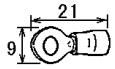	FV2-4 ｱｵ CODE NO. 000-538-118-00	14	

型式/ｺｰﾄﾞ番号が２段の場合、下段より上段に代わる過渡期品であり、どちらかが入っています。 なお、品質は変わりません。

TWO TYPES AND CODES MAY BE LISTED FOR AN ITEM. THE LOWER PRODUCT MAY BE SHIPPED IN PLACE OF THE UPPER PRODUCT. QUALITY IS THE SAME.

(略図の寸法は、参考値です。 DIMENSIONS IN DRAWING FOR REFERENCE ONLY.)

03GX-X-9402

FURUNO ELECTRIC CO., LTD

www.reelschematic.com

FURUNO

CODE NO.	008-572-730-00	03GX-X-9301 -0 1/1
TYPE	SP03-15501	BOX NO. P

SHIP NO.	SPARE PARTS LIST FOR	U S E	SETS PER VESSEL
	POWER CONTROL UNIT PSU-006	AC100V	

ITEM NO.	NAME OF PART	OUTLINE	DWG. NO. OR TYPE NO.	QUANTITY WORKING PER SET	QUANTITY WORKING PER VES	QUANTITY SPARE	REMARKS/CODE NO.
1	ﾋｭｰｽﾞ FUSE	30 φ6	FGBO 250V 5A PBF			2	000-155-840-10

MFR'S NAME	FURUNO ELECTRIC CO.,LTD.	DWG NO.	03GX-X-9301	1/1

（略図の寸法は、参考値です。 DIMENSIONS IN DRAWING FOR REFERENCE ONLY.）

型式/ｺｰﾄﾞ番号が２段の場合、下段より上段に代わる過渡期品であり、どちらかが入っています。 なお、品質は変わりません。

TWO TYPES AND CODES MAY BE LISTED FOR AN ITEM. THE LOWER PRODUCT MAY BE SHIPPED IN PLACE OF THE UPPER PRODUCT. QUALITY IS THE SAME.

FURUNO

CODE NO.	008-572-740-00	03GX-X-9302 -0 1/1
TYPE	SP03-15502	BOX NO. P

SHIP NO.	SPARE PARTS LIST FOR	U S E	SETS PER VESSEL
	POWER CONTROL UNIT PSU-006	AC220V	

ITEM NO.	NAME OF PART	OUTLINE	DWG. NO. OR TYPE NO.	QUANTITY WORKING PER SET	QUANTITY WORKING PER VES	QUANTITY SPARE	REMARKS/CODE NO.
1	ﾋｭｰｽﾞ FUSE	30 φ6	FGBO 250V 3A PBF			2	000-155-841-10

MFR'S NAME	FURUNO ELECTRIC CO.,LTD.	DWG NO.	03GX-X-9302	1/1

（略図の寸法は、参考値です。 DIMENSIONS IN DRAWING FOR REFERENCE ONLY.）

型式/ｺｰﾄﾞ番号が２段の場合、下段より上段に代わる過渡期品であり、どちらかが入っています。 なお、品質は変わりません。

TWO TYPES AND CODES MAY BE LISTED FOR AN ITEM. THE LOWER PRODUCT MAY BE SHIPPED IN PLACE OF THE UPPER PRODUCT. QUALITY IS THE SAME.

www.reelschematic.com

FURUNO

CODE NO.	008-539-850	03GL-X-9411 -0
TYPE	CP03-25604	1/1

工事材料表

INSTALLATION MATERIALS

番号 NO.	名称 NAME	略図 OUTLINE	型名／規格 DESCRIPTIONS		数量 Q'TY	用途／備考 REMARKS
1	+ｰﾅﾍﾞｾﾑｽﾈｼﾞB WASHER HEAD SCREW	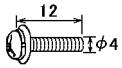	M4X12 C2700W MBN12		4	
			CODE NO.	000-881-447		

03GL-X-9411

FURUNO ELECTRIC CO., LTD.

（略図の寸法は、参考値です。 DIMENSIONS IN DRAWING FOR REFERENCE ONLY.）

FURUNO

CODE NO.	008-535-610	03GL-X-9505 -3
TYPE	FP03-09850	1/1

付属品表

ACCESSORIES

番号 NO.	名称 NAME	略図 OUTLINE	型名／規格 DESCRIPTIONS		数量 Q'TY	用途／備考 REMARKS
1	KB直付金具 KB FIXING METAL	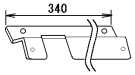	03-163-7521-1		1	操作部用 FOR CONTROL UNIT
			CODE NO.	100-306-251		
2	ｸﾞﾛﾒｯﾄ GROMMET	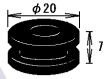	G-39		1	操作部用 FOR CONTROL UNIT
			CODE NO.	000-147-167		
3	+ｰﾅﾍﾞｾﾑｽﾈｼﾞB WASHER HEAD SCREW	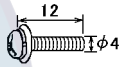	M4X12 C2700W MBN12		2	操作部用 FOR CONTROL UNIT
			CODE NO.	000-881-447		
4	ｸﾘｱﾊﾞﾝﾎﾞﾝ CUSHION		TM-180-302		3	操作部用 FOR CONTROL UNIT
			CODE NO.	000-803-043		

03GL-X-9505

FURUNO ELECTRIC CO., LTD.

（略図の寸法は、参考値です。 DIMENSIONS IN DRAWING FOR REFERENCE ONLY.）

www.reelschematic.com

FURUNO

CODE NO.	008-535-690	03GL-X-9506 -3
TYPE	FP03-09860	1/1

付属品表

ACCESSORIES

番号 NO.	名称 NAME	略図 OUTLINE	型名／規格 DESCRIPTIONS		数量 Q'TY	用途／備考 REMARKS
1	KB直付金具(T) KB FIXING METAL	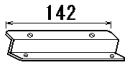	03-163-7821-1	CODE NO. 100-306-291	1	操作部用 FOR CONTROL UNIT
2	ﾌﾞﾗｲﾝﾄﾞｼｰﾙ SEAL		22-020-1005-1	CODE NO. 100-173-591	3	操作部用 FOR CONTROL UNIT
3	ｸﾞﾛﾒｯﾄ GROMMET	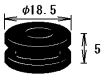	G-49	CODE NO. 000-871-309	1	操作部用 FOR CONTROL UNIT
4	+ｰﾅﾍﾞｾﾑｽﾈｼﾞB WASHER HEAD SCREW	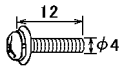	M4X12 C2700W MBNI2	CODE NO. 000-881-447	2	操作部用 FOR CONTROL UNIT
5	ｸﾘｱﾊﾞﾝﾎﾞﾝ CUSHION		TM-180-302	CODE NO. 000-803-043	2	操作部用 FOR CONTROL UNIT

03GL-X-9506

FURUNO ELECTRIC CO., LTD.

(略図の寸法は、参考値です。 DIMENSIONS IN DRAWING FOR REFERENCE ONLY.)

FURUNO

CODE NO.	008-535-630	03GL-X-9503 -2
TYPE	FP03-09870	1/1

付属品表

ACCESSORIES

For RCU-014/015/016 Flush mount kit

Option

番号 NO.	名称 NAME	略図 OUTLINE	型名／規格 DESCRIPTIONS		数量 Q'TY	用途／備考 REMARKS
1	ﾌﾗｯｼｭﾏｳﾝﾄ金具 FLUSH MOUNTING PLATE		03-163-7531-1	CODE NO. 100-306-261	4	
2	+ｰﾅﾍﾞｾﾑｽﾈｼﾞB WASHER HEAD SCREW	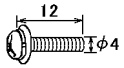	M4X12 C2700W MBNI2	CODE NO. 000-881-447	4	
3	六角ﾅｯﾄ 1種 HEX.NUT		M5 SUS304	CODE NO. 000-863-108	4	
4	蝶ﾎﾞﾙﾄ WING SCREW	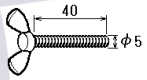	M5X40 SUS304	CODE NO. 000-149-997	4	

03GL-X-9503

FURUNO ELECTRIC CO., LTD.

(略図の寸法は、参考値です。 DIMENSIONS IN DRAWING FOR REFERENCE ONLY.)

www.reelschematic.com

PACKING LIST

03GL-X-9859 -0 1/1

FP03-09820/09830 For MU-201CR/231CR Desktop mount kit Option

NAME	OUTLINE	DESCRIPTION/CODE No.	Q'TY
付属品 ACCESSORIES		**FP03-09820/09830**	
六角ｾﾑｽB ｽﾘﾜﾘ HEX.BOLT (SLOTTED,WASHER HEAD)	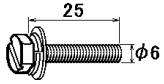	M6X25 SUS304 000-802-771	4
六角ﾎﾞﾙﾄ ｽﾘﾜﾘ HEX.BOLT	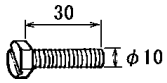	M10X30 SUS304 000-802-182	2
ﾊﾞﾈ座金 SPRING WASHER		M10 SUS304 000-864-261	2
ﾐｶﾞｷ平座金 FLAT WASHER		M10 SUS304 000-864-131	2
ｽﾅｯﾌﾟﾎﾞﾀﾝ PLASTIC RIVET	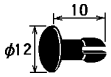	KB-13ﾖｳ ﾎﾞﾀﾝｸﾛ 000-570-276	4
ﾎｰﾙﾌﾟﾗｸﾞ HOLE PLUG		CP-30-HP-13 000-147-143	2
ﾊﾝｶﾞｰR(20) HANGER R	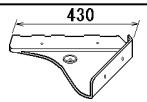	03-163-1112-0 100-305-180	1
ﾊﾝｶﾞｰL(20) HANGER L	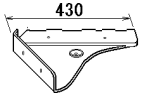	03-163-1111-0 100-305-140	1
ﾊﾝｶﾞｰｻｻｴ(20) HANGER STAY	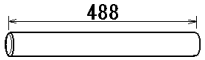	03-163-1113-0 100-305-190	1 (*1)
ﾊﾝｶﾞｰｻｻｴ(23) HANGER STAY	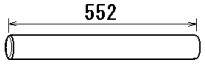	03-163-2071-0 100-305-370	1 (*2)

(*1)は、FP03-09820用です。
*1: FOR FP03-09820.
(*2)は、FP03-09830用です。
*2: FOR FP03-09830.

(略図の寸法は、参考値です。 DIMENSIONS IN DRAWING FOR REFERENCE ONLY.)

03GL-X-9859

FURUNO

CODE NO.	008-535-570	03GL-X-9502 -0
TYPE	FP03-09840	1/1

付属品表

ACCESSORIES

For MU-201CR/MU-231CR

Option

番号 NO.	名称 NAME	略図 OUTLINE	型名／規格 DESCRIPTIONS		数量 Q'TY	用途／備考 REMARKS
1	取手 HANDLE	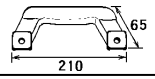	14-002-1125-2	CODE NO. 840-211-252	2	
2	ﾛｰｾﾞｯﾄ座金 ROSETTE WASHER		M6 C2700W ﾎﾟﾘｼｰﾙ ｸﾛ	CODE NO. 000-864-910	4	
3	+丸皿小ﾈｼﾞ OVAL COUNTERSUNK HEAD SCREW	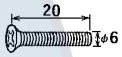	M6X20 C2700W ﾎﾟﾘｼｰﾙ ｸﾛ	CODE NO. 000-861-475	4	
4	波座金 WAVE WASHER		WW-6 SUS	CODE NO. 000-864-350	4	

03GL-X-9502

FURUNO ELECTRIC CO., LTD.

(略図の寸法は、参考値です。 DIMENSIONS IN DRAWING FOR REFERENCE ONLY.)

www.reelschematic.com

PACKING LIST

03G0-X-9855 -3 1/1

CU-200-FAR

NAME	OUTLINE	DESCRIPTION/CODE No.	Q'TY
ユニット UNIT			
ﾒﾓﾘｰｶｰﾄﾞｲﾝﾀｰﾌｪｲｽ MEMORY CARD INTERFACE		CU-200 000-081-569-00	1
工事材料 INSTALLATION MATERIALS			
工事材料 INSTALLATION MATERIALS		CP03-27431 008-544-400-00	1
その他工材 OTHER INSTALLATION MATERIALS			
ｹｰﾌﾞﾙ組品 CABLE ASSY.	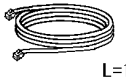 L=10M	P5E-4PTX-BL 000-147-510-00	1
ｹｰﾌﾞﾙ組品MJ CABLE ASSY.	 L=10M	MJ-A3SPF0015-100C 000-156-054-11	1

型式/ｺｰﾄﾞ番号が2段の場合、下段より上段に代わる過渡期品であり、どちらかが入っています。 なお、品質は変わりません。

TWO TYPES AND CODES MAY BE LISTED FOR AN ITEM. THE LOWER PRODUCT MAY BE SHIPPED IN PLACE OF THE UPPER PRODUCT. QUALITY IS THE SAME.

(略図の寸法は、参考値です。 DIMENSIONS IN DRAWING FOR REFERENCE ONLY.)

03G0-X-9855

FURUNO

CODE NO.	008-544-400	03G0-X-9404 -2
TYPE	CP03-27431	1/1

工事材料表

INSTALLATION MATERIALS

番号 NO.	名称 NAME	略図 OUTLINE	型名／規格 DESCRIPTIONS		数量 Q'TY	用途／備考 REMARKS
1	舵輪貼りﾏｰｸ(BSH) STEERING WHEEL LABEL	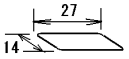	03-801-0851-3	CODE NO. 100-277-723	1	
2	舵輪ﾏｰｸ貼付要領 LABEL ATTACHING PROCEDURE	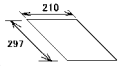	C32-00407-* ﾜ/ｴｲ	CODE NO. 000-150-918	1	
3	ﾊﾞﾈ座金 SPRING WASHER		M4 SUS304	CODE NO. 000-864-256	4	
4	ﾐｶﾞｷ平座金 FLAT WASHER		M4 SUS304	CODE NO. 000-864-126	4	
5	六角ﾅｯﾄ 一種 HEX. NUT		M4 SUS304	CODE NO. 000-863-106	4	
6	寸切ﾎﾞﾙﾄ THREADED ROD	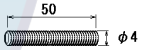	M4X50 SUS304	CODE NO. 000-147-539	4	

03G0-X-9404

FURUNO ELECTRIC CO., LTD.

(略図の寸法は、参考値です。 DIMENSIONS IN DRAWING FOR REFERENCE ONLY.)

www.reelschematic.com

FURUNO

CODE NO.	008-539-530	03G0-X-9502 -0
TYPE	FP03-10201	1/1

付属品表

ACCESSORIES

For CU-200 Desktop mount kit

Option

番号 NO.	名称 NAME	略図 OUTLINE	型名／規格 DESCRIPTIONS	数量 Q'TY	用途／備考 REMARKS
1	ﾊﾝｶﾞｰ MOUNTING BRACKET	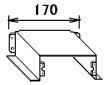	19-023-3081-0 CODE NO. 100-316-250	1	
2	+ﾄﾗｽﾀｯﾋﾟﾝﾈｼﾞ +TAPPING SCREW	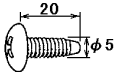	5X20 SUS304 1ｼｭ CODE NO. 000-802-081	4	
3	+ｰﾅﾍﾞｾﾑｽﾈｼﾞA WASHER HEAD SCREW	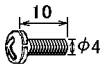	M4X10 C2700W MBN12 CODE NO. 000-881-145	4	

03G0-X-9502

FURUNO ELECTRIC CO., LTD.

(略図の寸法は、参考値です。 DIMENSIONS IN DRAWING FOR REFERENCE ONLY.)

03GL-X-9852-2 1/1

NAME	OUTLINE	DESCRIPTION/CODE No.	Q'TY
+ｰﾅﾍﾞｾﾑｽﾈｼﾞB WASHER HEAD SCREW	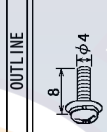	M4X8 C2700W MBN12 000-881-445	3
+ｰﾅﾍﾞｾﾑｽﾈｼﾞB WASHER HEAD SCREW		M3X8 C2700W MBN12 000-881-404	5
+ﾅﾍﾞｾﾑｽﾈｼﾞA WASHER HEAD SCREW		M2.6X10 C2700W MBN12 000-801-844	2
GCｶﾊﾞｰ組品 GC COVER ASSY.		80-0665 008-537-030	1

PACKING LIST GC-10-2

NAME	OUTLINE	DESCRIPTION/CODE No.	Q'TY
予備品 SPARE PARTS			
予備品 SPARE PARTS		SP03-13300 008-419-280	1
その他部品 OTHER PARTS			
NHｺﾈｸﾀ NH CONNECTOR ASSY.		03-2091(5P) 008-534-670	1
VHｺﾈｸﾀ VH CONNECTOR ASSY.		03-2090(3P) 008-534-660	1
VHｺﾈｸﾀ VH CONNECTOR ASSY.		03-2089(5P) 008-534-650	1
XH-PHｺﾈｸﾀ XH-PH CONNECTOR ASSY.		03-2088(6-14P) 008-534-640	1
演算ﾌﾟﾘﾝﾄ PROCESSOR BOARD		64P1106A 004-412-220	1
ｺﾈｸﾀ(231) CONNECTOR		231-607/019-FUR 000-147-414	1
ｺﾈｸﾀ(231) CONNECTOR		231-107/026-FUR 000-147-413	1

(略図の寸法は、参考値です。 DIMENSIONS IN DRAWING FOR REFERENCE ONLY.)

www.reelschematic.com

FURUNO

CODE NO.	008-419-280-00	03GL-X-9302 -2 1/1
TYPE	SP03-13300	BOX NO. P

SHIP NO.	SPARE PARTS LIST FOR	U S E	SETS PER VESSEL
		GC-10	

ITEM NO.	NAME OF PART	OUTLINE	DWG. NO. OR TYPE NO.	QUANTITY WORKING PER SET	QUANTITY WORKING PER VES	QUANTITY SPARE	REMARKS/CODE NO.
1	ﾋｭｰｽﾞ FUSE	20 φ5	FGMB 250V 2A PBF FGMB 2A 250V			8	000-157-497-10 000-122-000-00

MFR'S NAME	FURUNO ELECTRIC CO.,LTD.	DWG NO.	03GL-X-9302	1/1

（略図の寸法は、参考値です。 DIMENSIONS IN DRAWING FOR REFERENCE ONLY.）

型式/ｺｰﾄﾞ番号が２段の場合、下段より上段に代わる過渡期品であり、どちらかが入っています。 なお、品質は変わりません。

TWO TYPES AND CODES MAY BE LISTED FOR AN ITEM. THE LOWER PRODUCT MAY BE SHIPPED IN PLACE OF THE UPPER PRODUCT. QUALITY IS THE SAME.

FURUNO

CODE NO.	008-535-640-00	03GL-X-9408 -4
TYPE	OP03-183	1/1

工事材料表 INSTALLATION MATERIALS	Coupling pedestal kit RCU-014 + MU-201CR	Option

番号 NO.	名称 NAME	略図 OUTLINE	型名／規格 DESCRIPTIONS	数量 Q'TY	用途／備考 REMARKS
1	ﾅｰﾊﾞｰｾﾑｽｸﾘｭｰB WASHER HEAD SCREW	12 φ4	M4X12 C2700W MBNI2 CODE NO. 000-881-447-00	4	
2	ﾅｰﾊﾞｰｾﾑｽｸﾘｭｰB WASHER HEAD SCREW	20 φ4	M4X20 C2700W MBNI2 CODE NO. 000-881-451-00	2	
3	連結台(20)組品 COUPLING PLATE ASSY.	553 534	OP03-183-1 CODE NO. 008-536-980-00	1	

型式/ｺｰﾄﾞ番号が２段の場合、下段より上段に代わる過渡期品であり、どちらかが入っています。 なお、品質は変わりません。

TWO TYPES AND CODES MAY BE LISTED FOR AN ITEM. THE LOWER PRODUCT MAY BE SHIPPED IN PLACE OF THE UPPER PRODUCT. QUALITY IS THE SAME.

（略図の寸法は、参考値です。 DIMENSIONS IN DRAWING FOR REFERENCE ONLY.）

FURUNO ELECTRIC CO., LTD. 03GL-X-9408

www.reelschematic.com

PACKING LIST

03GL-X-9861 -6 1/1

OP03-180-2 DVI-RGB conversion kit Option

NAME	OUTLINE	DESCRIPTION/CODE No.	Q'TY
その他部品 OTHER PARTS			
ﾅﾍﾞｾﾑｽﾈｼﾞB WASHER HEAD SCREW	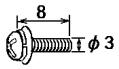	M3X8 C2700W MBNI2 000-881-404-00	10
DVI-RGB組品 DVI-RGB ASSY.	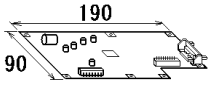	SLB-FRN4-A 008-537-660-00	1
RGB-BUFFﾌﾟﾘﾝﾄ RGB-BUFF BOARD	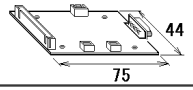	03P9229B 008-514-980-00	1
VHｺﾈｸﾀ組品 VH CONNECTOR ASSY.	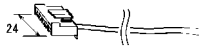	03-2092(6P) 008-534-690-00	1
XHｺﾈｸﾀ組品 XH CONNECTOR ASSY.	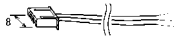	03-2093(3P) 008-534-700-00	1
XHｺﾈｸﾀ組品 XH CONNECTOR ASSY.		03-2094(13-10P) 008-534-710-00	1
ｹｰﾌﾞﾙ組品 CABLE ASSY.	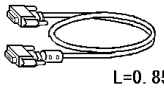	DVI-D/D S-LINK 0.85M 000-148-644-00	1
ｽﾍﾟｰｻｰ SPACER	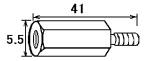	SQ-35 SQ-35 000-159-310-10 000-801-651-00	6
ﾊﾞﾈｻﾞｶﾞﾈ SPRING WASHER		M3 C5191W MBNI2 000-864-204-00	6

型式/ｺｰﾄﾞ番号が2段の場合、下段より上段に代わる過渡期品であり、どちらかが入っています。 なお、品質は変わりません。

TWO TYPES AND CODES MAY BE LISTED FOR AN ITEM. THE LOWER PRODUCT MAY BE SHIPPED IN PLACE OF THE UPPER PRODUCT. QUALITY IS THE SAME.

（略図の寸法は、参考値です。 DIMENSIONS IN DRAWING FOR REFERENCE ONLY.）

03GL-X-9861

FURUNO

CODE NO.	008-542-460	03GL-X-9407 -3
TYPE	CP03-28901	1/1

工事材料表

INSTALLATION MATERIALS

For LAN cable kit

Option

番号 NO.	名称 NAME	略図 OUTLINE	型名／規格 DESCRIPTIONS	数量 Q'TY	用途／備考 REMARKS
1	ｺﾈｸﾀ(ﾓｼﾞｭﾗｰ) MODULAR CONNCTOR	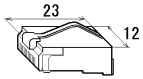	MPS588-C CODE NO. 000-148-322	2	

03GL-X-9407

FURUNO ELECTRIC CO., LTD.

（略図の寸法は、参考値です。 DIMENSIONS IN DRAWING FOR REFERENCE ONLY.）

www.reelschematic.com

FURUNO

表 1 TABLE 1

寸法区分（mm） DIMENSIONS	公差（mm） TOLERANCE
L≦50	±1.5
50<L≦100	±2.5
100<L≦500	±3
500<L≦1000	±4
1000<L≦2000	±5
2000<L≦4000	±7

表 2 TABLE 2

アンテナ型式 ANT. TYPE	XN4A (240cm型)	XN5A (300cm型)
A：空中線長 ANT. LENGTH	2,570±10mm	3,210±10mm
B：回転安全空間 ANT. CLEARANCE	2,700mm	3,340mm
質 量 MASS	74kg±10%	79kg±10%

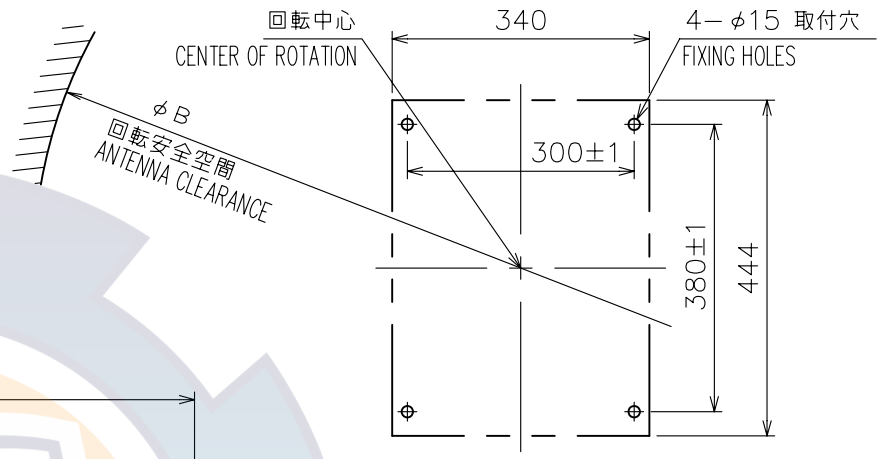

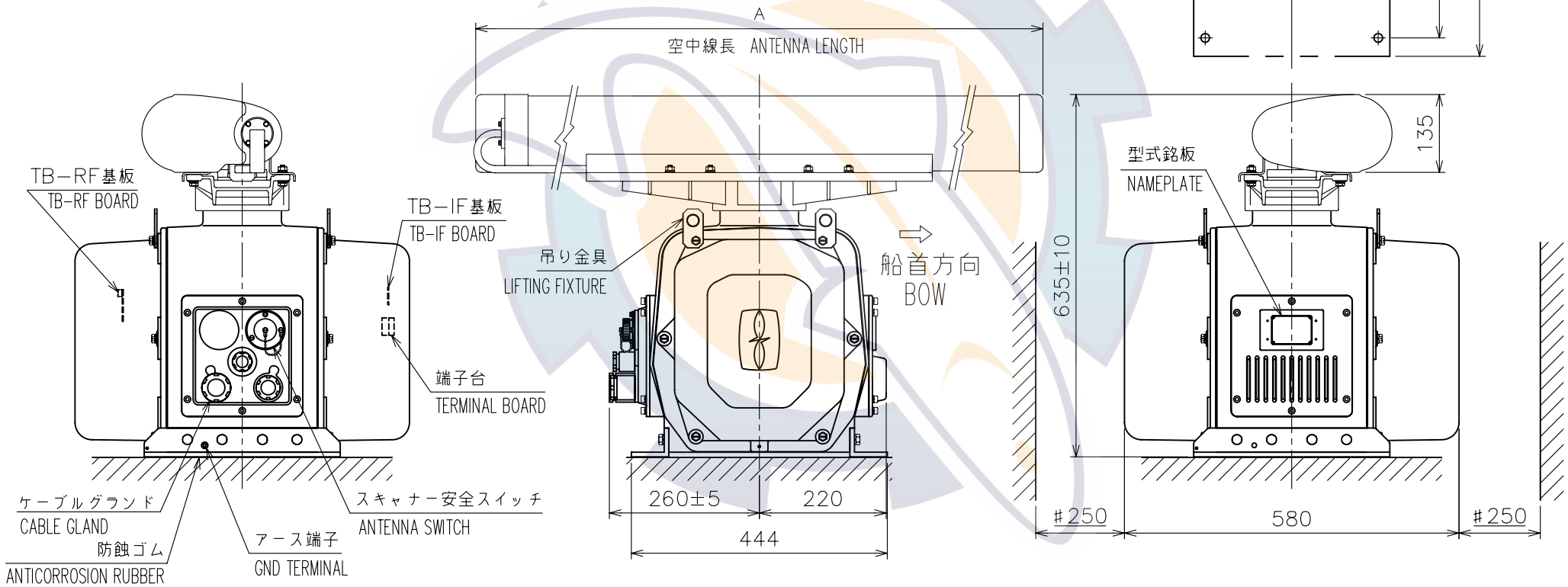

注 記 1） #印寸法は最小サービス空間寸法とする。
2） 指定外の寸法公差は表１による。
3） 取付用ネジはＭ１２ボルトを使用のこと。

NOTE 1. #: MINIMUM SERVICE CLEARANCE.
2. TABLE 1 INDICATES TOLERANCE OF DIMENSIONS WHICH IS NOT SPECIFIED.
3. USE M12 BOLTS FOR FIXING THE UNIT.

DRAWN Dec. 27, '06 E. MIYOSHI			TITLE RSB-106/107
CHECKED TAKAHASHI. T			名称 空中線部
APPROVED Y. Hatai	FAR-2157		外寸図
SCALE 1/10	MASS 表2参照 SEE TABLE 2		NAME ANTENNA UNIT
DWG.No. C3522-G01- A	REF.No. 03-171-300G-2		OUTLINE DRAWING

FURUNO ELECTRIC CO., LTD.

D-1

www.reelschematic.com

www.reelschematic.com

FURUNO

D-2

表 1 TABLE 1

寸法区分（mm） DIMENSIONS	公差（mm） TOLERANCE
L≦50	±1.5
50<L≦100	±2.5
100<L≦500	±3

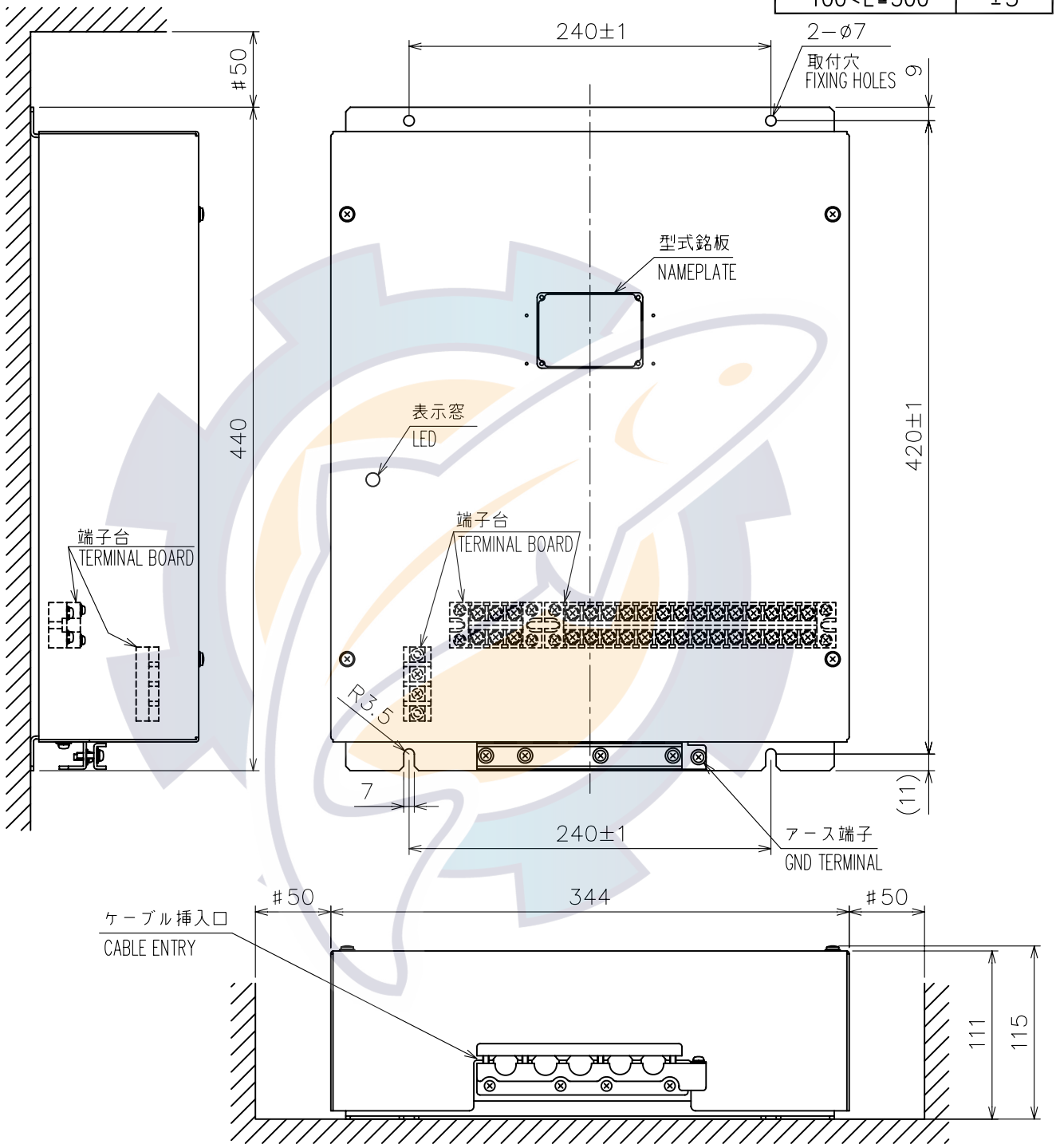

注　記

1）＃印寸法は最小サービス空間寸法とする。
2）指定外の寸法公差は表１による。
3）取付用ネジはトラスタッピンネジ呼び径6×20を使用のこと。

NOTE

1. #: MINIMUM SERVICE CLEARANCE.
2. TABLE 1 INDICATES TOLERANCE OF DIMENSIONS WHICH IS NOT SPECIFIED.
3. USE SELF-TAPPING SCREWS 6x20 FOR FIXING THE UNIT.

DRAWN Jan. 30, '07 E. MIYOSHI		TITLE	PSU-006
CHECKED TAKAHASHI. T		名称	電源制御部
APPROVED Y. Hatai	FAR-2157/2167DS		外寸図
SCALE 1/4 MASS 5.2 ±10% kg		NAME	POWER UNIT
DWG.No. C3523-G01- A	REF.No. 03-171-900G- 3		OUTLINE DRAWING

FURUNO ELECTRIC CO., LTD.

www.freeschematic.com

表 1 TABLE 1

寸法区分（mm） DIMENSIONS	公差（mm） TOLERANCE
L≦50	±1.5
50<L≦100	±2.5
100<L≦500	±3

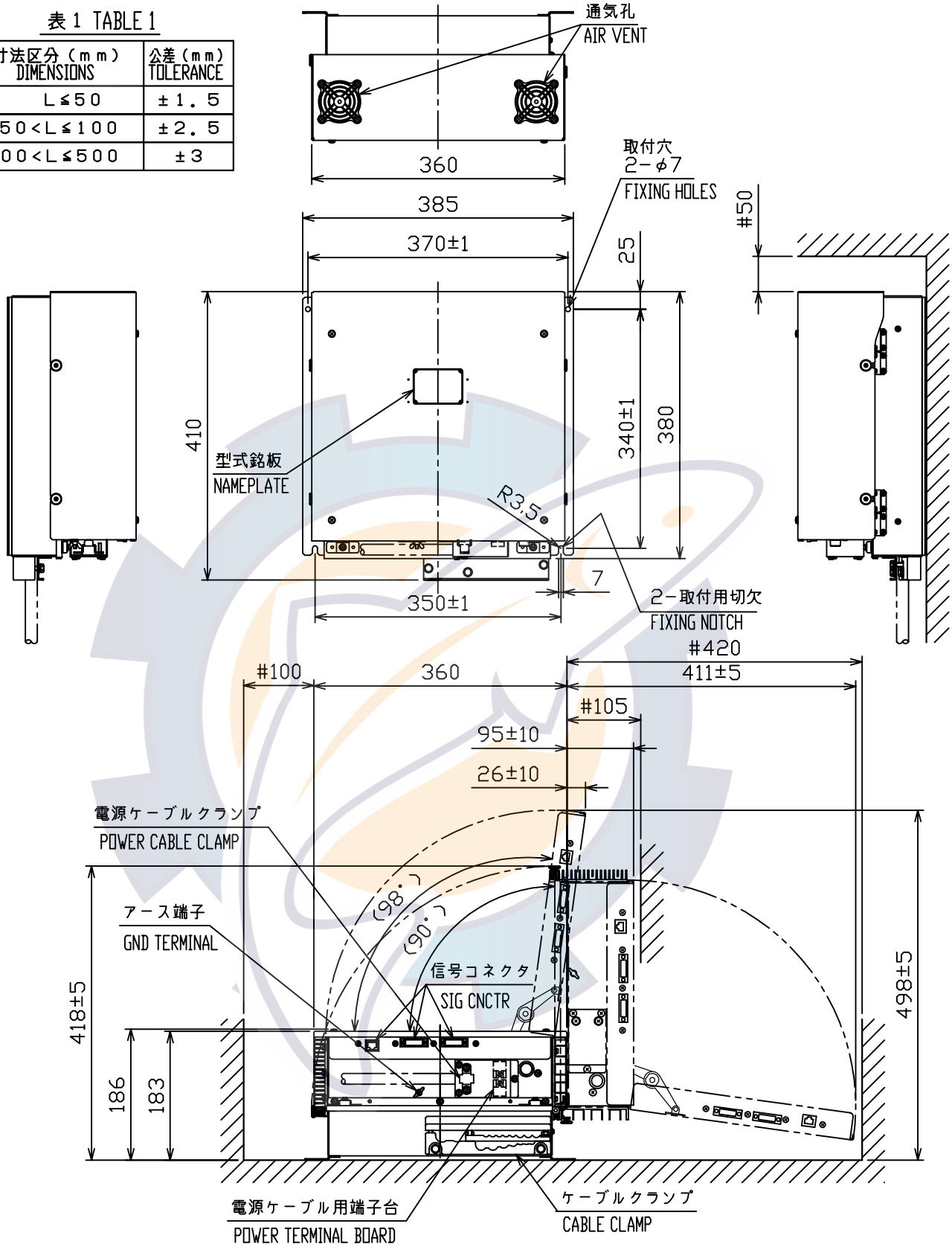

注　記　1）　#印寸法は最小サービス空間寸法とする。
2）　指定外の寸法公差は表1による。
3）　取付けはM6ボルト、またはコーチボルト呼び径6を使用のこと。

NOTE 1. #: MINIMUM SERVICE CLEARANCE.
2. TABLE 1 INDICATES TOLERANCE OF DIMENSIONS WHICH IS NOT SPECIFIED.
3. USE M6 BOLTS OR COACH SCREWS φ6 FOR FIXING THE UNIT.

DRAWN Nov 17 '03 E. MIYOSHI		TITLE	RPU-013
CHECKED Takahashi T.		名称	制御部
APPROVED Y. Hatai	FAR-2117/2817 SER.		外寸図
SCALE 1/8 MASS 10 ±10% kg		NAME	PROCESSOR UNIT
DWG.No. C3519-G03- C	03-163-800G-2		OUTLINE DRAWING

FURUNO ELECTRIC CO., LTD.

FURUNO

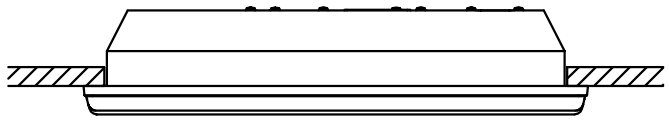

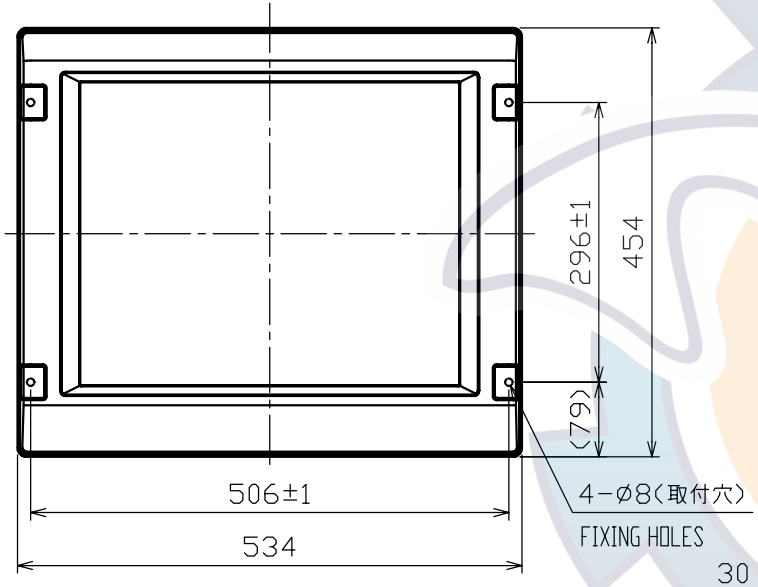

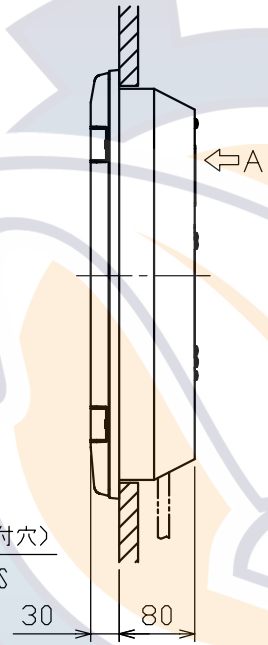

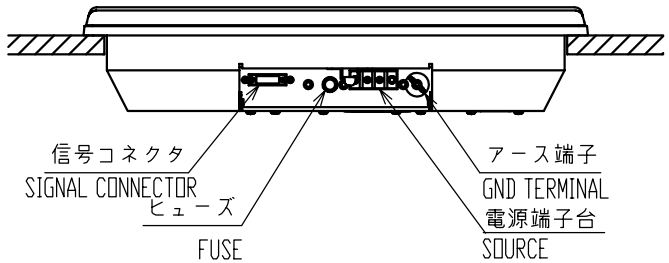

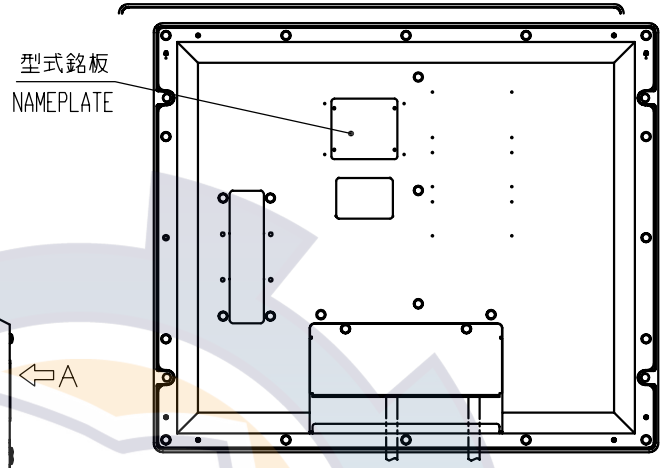

矢視A VIEW A

表1 TABLE 1

寸法区分（mm） DIMENSIONS	公差（mm） TOLERANCE
L≦50	±1.5
50<L≦100	±2.5
100<L≦500	±3
500<L≦1000	±4

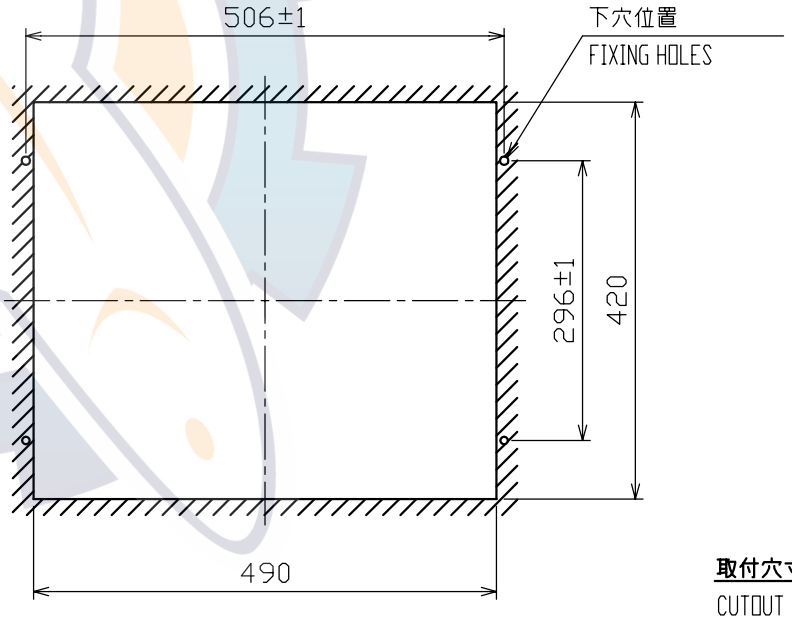

取付穴寸法図
CUTOUT DIMENTIONS

注　記　1）指定外の寸法公差は表1による。
　　2）取付には＋トラスタッピンネジ6×30を使用のこと。

NOTE　1. TABLE 1 INDICATES TOLERANCE OF DIMENSIONS WHICH IS NOT SPECIFIED.
　　2. USE TAPPING SCREWS 6x30 FOR FIXING THE UNIT.

DRAWN	Nov. 25 '03 E. MIYOSHI		TITLE MU-201CR
CHECKED	Takahashi T.		名称 表示部（埋込装備）
APPROVED	Y. Hatai	FAR-2117 SER.	外寸図
SCALE 1/8	MASS 11.0 ±10% kg		NAME MONITOR UNIT (FLUSH MOUNT)
DWG.No.	C3519-G05- B	03-163-110G-2	OUTLINE DRAWING

FURUNO ELECTRIC CO., LTD.

D-4

www.reelschematic.com

FURUNO

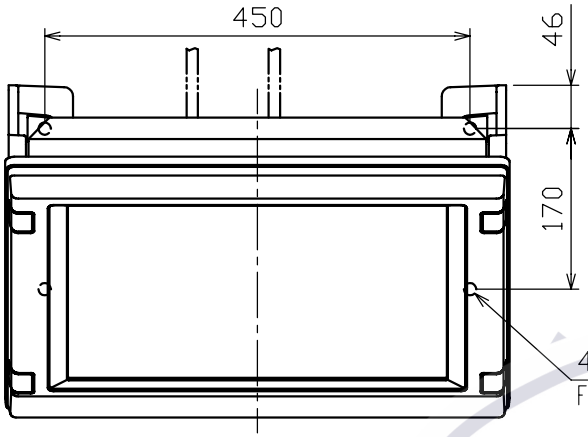

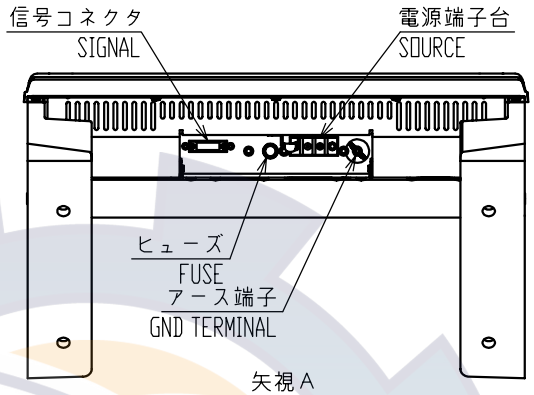

表 1 TABLE 1

寸法区分（mm）DIMENSIONS	公差（mm）TOLERANCE
L≦50	±1.5
50<L≦100	±2.5
100<L≦500	±3
500<L≦1000	±4

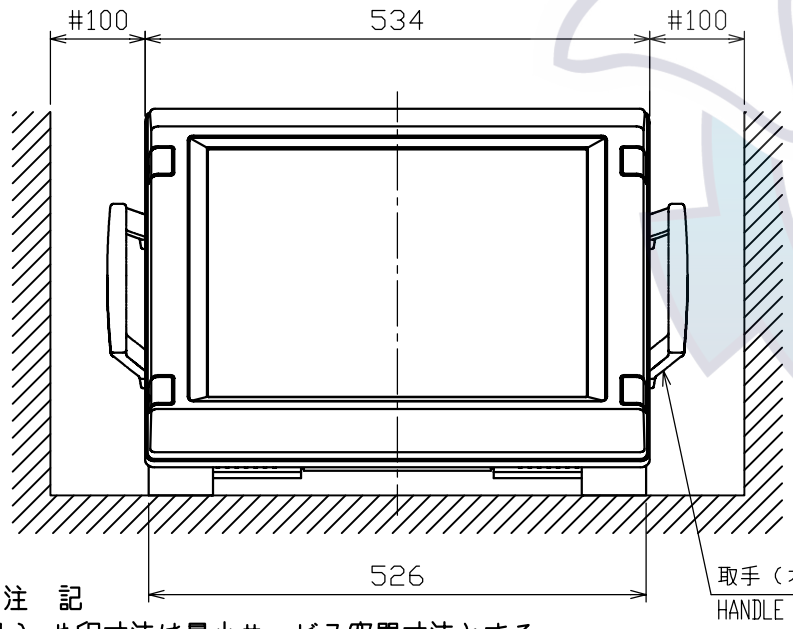

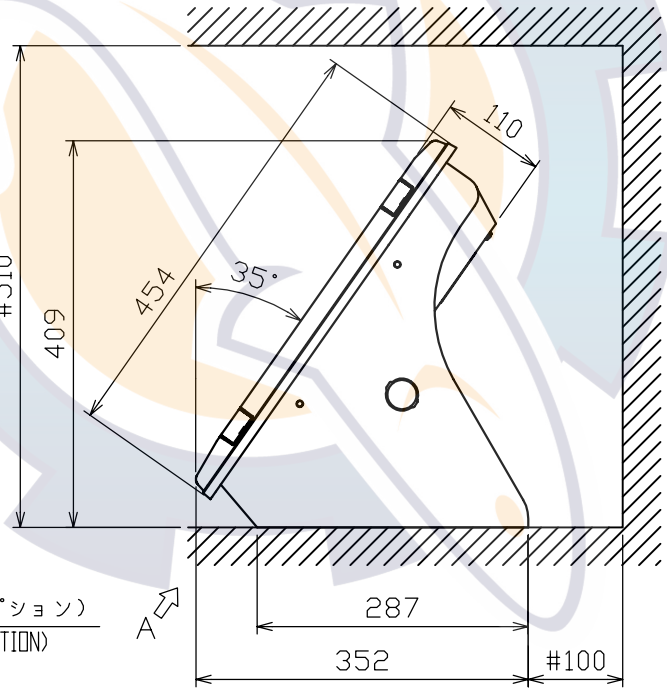

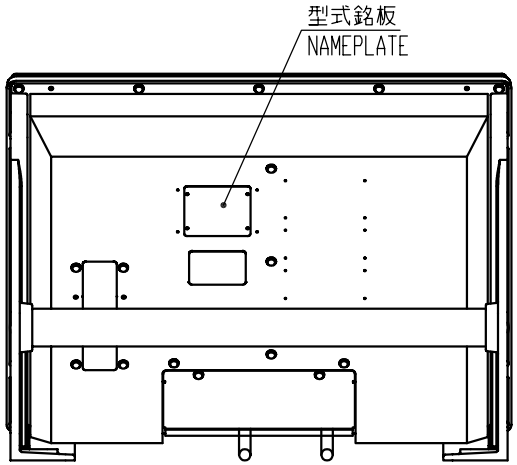

注　記

1）＃印寸法は最小サービス空間寸法とする。

2）指定外の寸法公差は表１による。

3）取付にはＭ１０ボルトまたはコーチボルト呼び径９を使用のこと。

NOTE

1. #: MINIMUM SERVICE CLEARANCE.
2. TABLE 1 INDICATES TOLERANCE OF DIMENSIONS WHICH IS NOT SPECIFIED.
3. USE M10 BOLTS OR COACH SCREWS ϕ9 FOR FIXING THE UNIT.

DRAWN	Jan. 7 '04 E. MIYOSHI		TITLE MU-201CR
CHECKED	Takahashi T.		名称 表示部（卓上装備）
APPROVED	Y. Hatai	FAR-2117 SER.	外寸図
SCALE 1/8	MASS 17.0 ±10% kg		NAME MONITOR UNIT (DESKTOP MOUNT)
DWG.No.	C3519-G04- B	03-163-100G-2	OUTLINE DRAWING

FURUNO ELECTRIC CO., LTD.

D-5

www.reelschematic.com

FURUNO

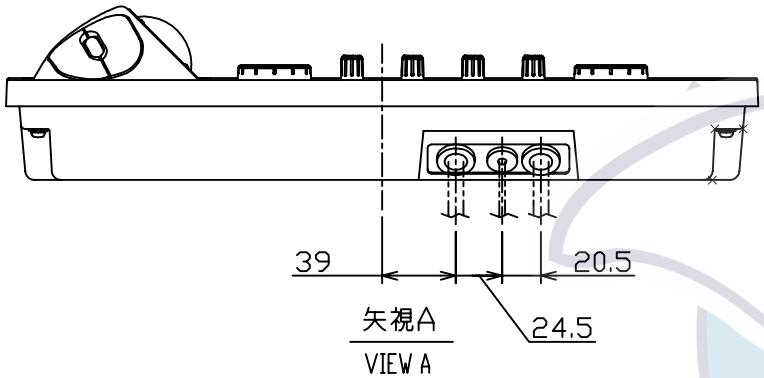

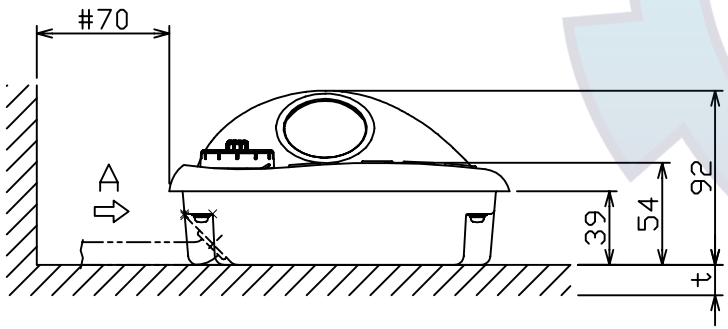

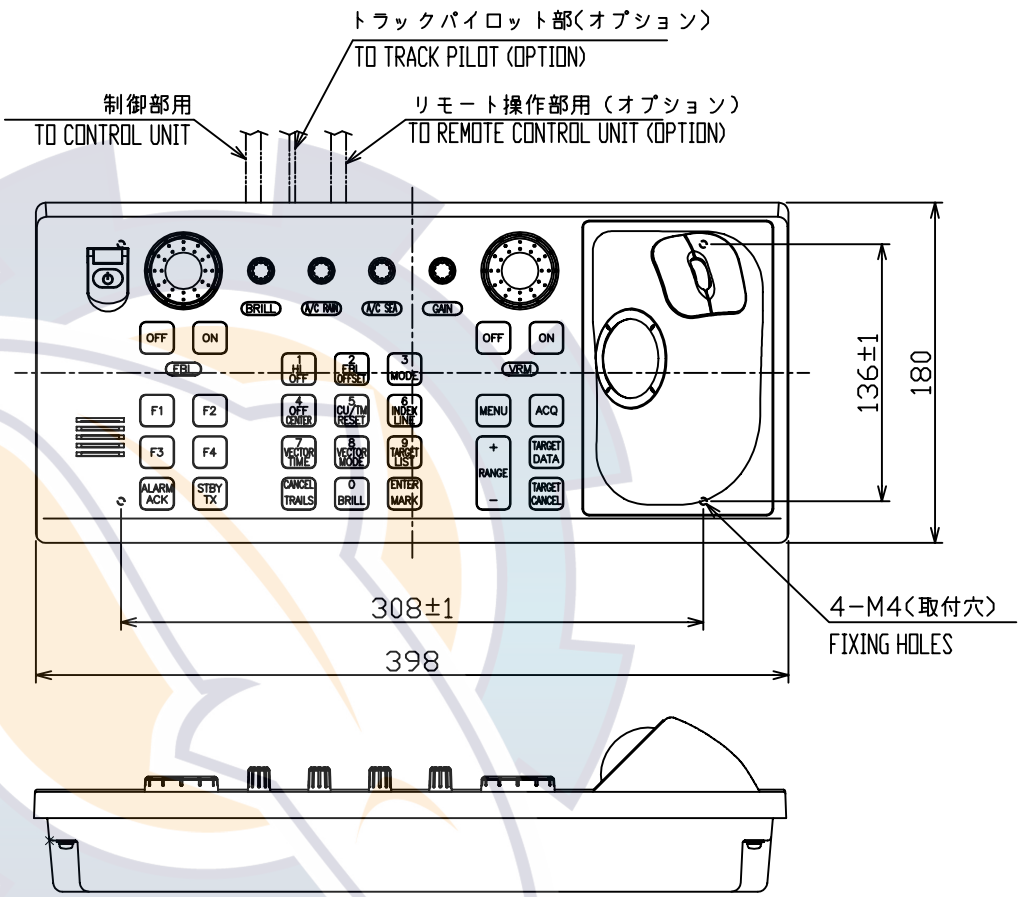

注　記　1）＃印寸法は最小サービス空間寸法とする。
　　2）指定外の寸法公差は表１による。
　　3）取付用ネジはセムスＢ（Ｍ４Ｘ（ｔ＋４））を使用のこと。
　　4）質量はケーブル（１０m)を含む

NOTE
1. #: MINIMUM SERVICE CLEARANCE.
2. TABLE 1 INDICATES TOLERANCE OF DIMENSIONS WHICH IS NOT SPECIFIED.
3. USE SEMS SCREWS M4x(t+4) FOR FIXING THE UNIT.
4. MASS IN CLUDES CABLE (10M).

表１ TABLE 1

寸法区分（ｍｍ） DIMENSIONS	公差（ｍｍ） TOLERANCE
Ｌ≦５０	±１．５
５０<Ｌ≦１００	±２．５
１００<Ｌ≦５００	±３

DRAWN	Jan. 26 '03 E. MIYOSHI		TITLE RCU-014
CHECKED	Takahashi T.		名称 操作部
APPROVED	Y. Hatai	FAR-2117/2817 SER.	外寸図
SCALE 1/4	MASS 3.7 ±10% kg		NAME CONTROL UNIT
DWG.No.	C3519-G06- C	03-163-750G-3	OUTLINE DRAWING

FURUNO ELECTRIC CO., LTD.

D-6

www.reelschematic.com

FURUNO

表１ TABLE 1

寸法区分（ｍｍ） DIMENSIONS	公差（ｍｍ） TOLERANCE
Ｌ≦５０	±１．５
５０<Ｌ≦１００	±２．５
１００<Ｌ≦５００	±３

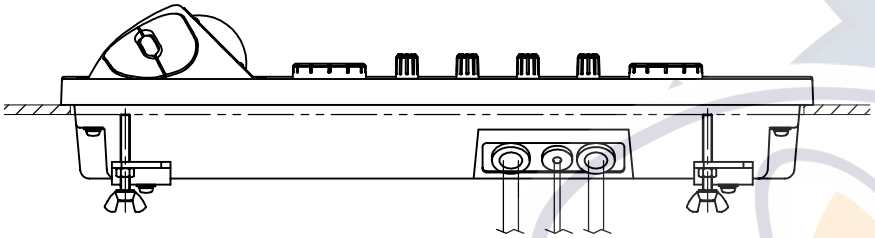

矢視Ａ
VIEW A

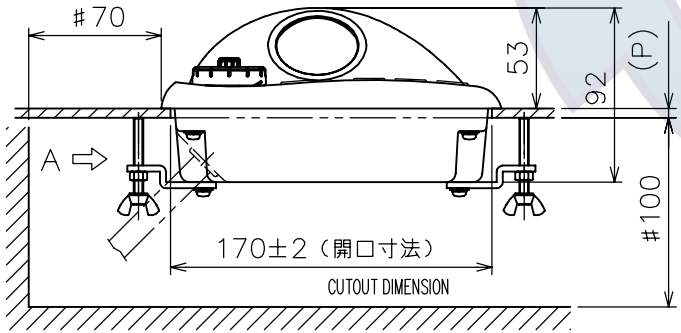

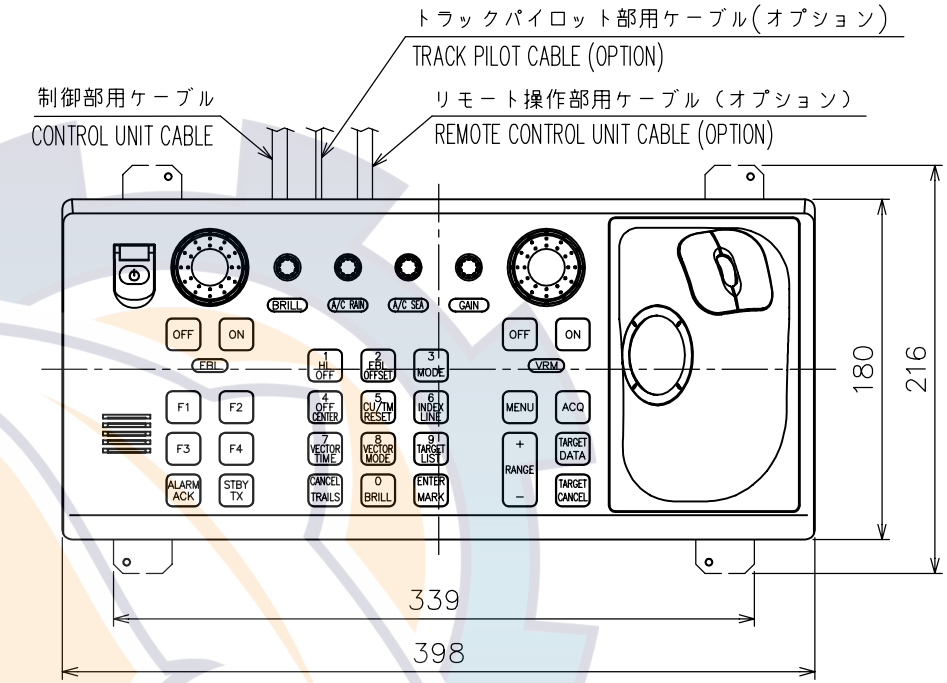

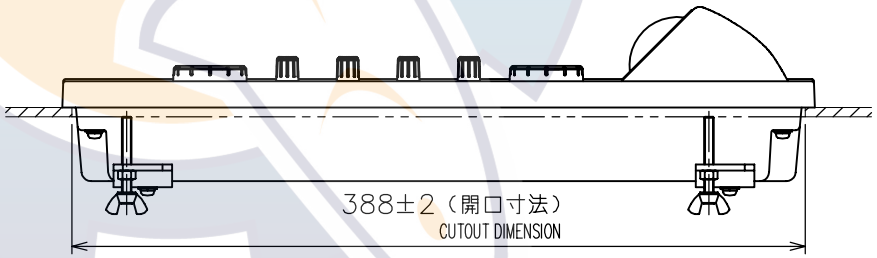

NOTE
1. #: MINIMUM SERVICE CLEARANCE.
2. TABLE 1 INDICATES TOLERANCE OF DIMENSIONS WHICH IS NOT SPECIFIED.
3. MASS INCLUDES CABLE (10M).
4. THICKNESS (P) 20 MM MAX.

注　記　１）＃印寸法は最小サービス空間寸法とする。
２）指定外の寸法公差は表１による。
３）質量はケーブル（１０ｍ）を含む
４）壁の厚さ（Ｐ）は最大２０とする

DRAWN	Mar. 17 '04 E. MIYOSHI		TITLE RCU-014
CHECKED	TAKAHASHI.T		名称 操作部（埋込装備）
APPROVED	Y. Hatai	FAR-2817 SER.	外寸図
SCALE 1/4	MASS 3.8 ±10% kg		NAME CONTROL UNIT (FLUSH MOUNT)
DWG.No.	C3524-G04- C	03-163-751G-2	OUTLINE DRAWING

FURUNO ELECTRIC CO., LTD.

www.reelschematic.com

FURUNO

表１ TABLE 1

寸法区分（ｍｍ） DIMENSIONS	公差（ｍｍ） TOLERANCE
L≦50	±1.5
50<L≦100	±2.5
100<L≦500	±3

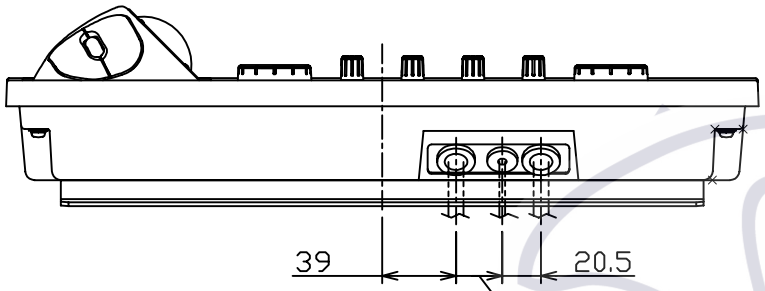

矢視D
VIEW D

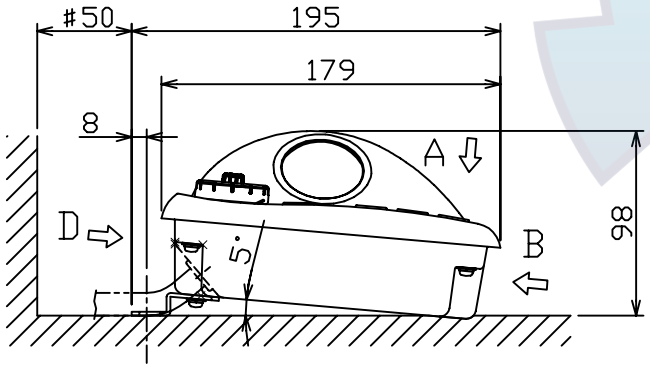

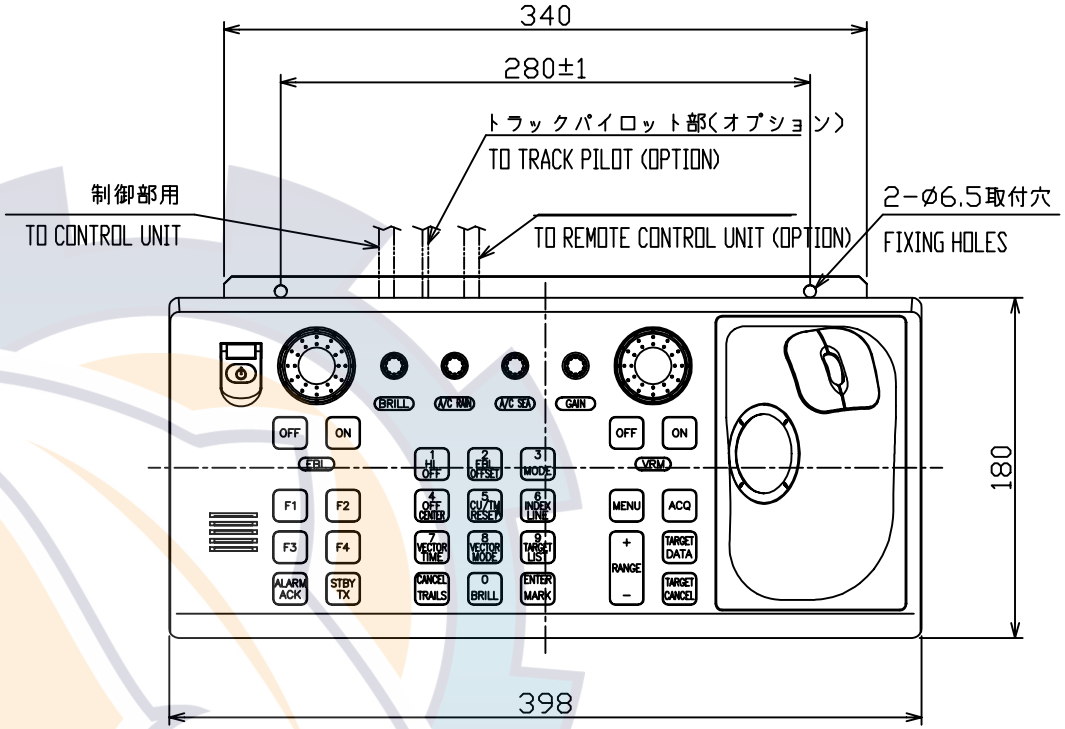

矢視A VIEW A

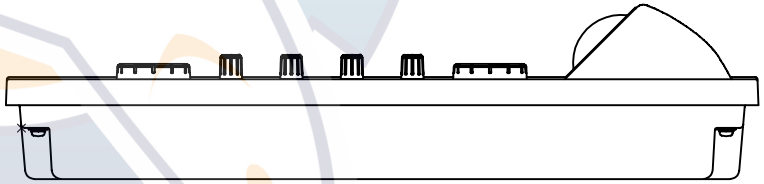

矢視B VIEW B

NOTE
1. #: MINIMUM SERVICE CLEARANCE.
2. TABLE 1 INDICATES TOLERANCE OF DIMENSIONS WHICH IS NOT SPECIFIED.
3. USE TAPPING SCREWS (φ6) OR M6 BOLTS FOR FIXING.
4. MASS INCLUDES CABLE (10M).

注　記　１）＃印寸法は最小サービス空間寸法とする。
２）指定外の寸法公差は表１による。
３）取付用ネジはトラスタッピンネジ呼び径６、またはＭ６ボルトを使用のこと
４）質量はケーブル（１０ｍ)を含む

DRAWN Jan. 7 '04 E. MIYOSHI			TITLE RCU-014
CHECKED Takahashi T.			名称 操作部（直付金具装備）
APPROVED Y. Hatai	FAR-2817 SER.		外寸図
SCALE 1/4	MASS 4.0 ±10% kg		NAME CONTROL UNIT (DESKTOP W/KB PLATE)
DWG.No. C3524-G05- B	03-163-752G-1		OUTLINE DRAWING

FURUNO ELECTRIC CO., LTD.

www.reelschematic.com

FURUNO

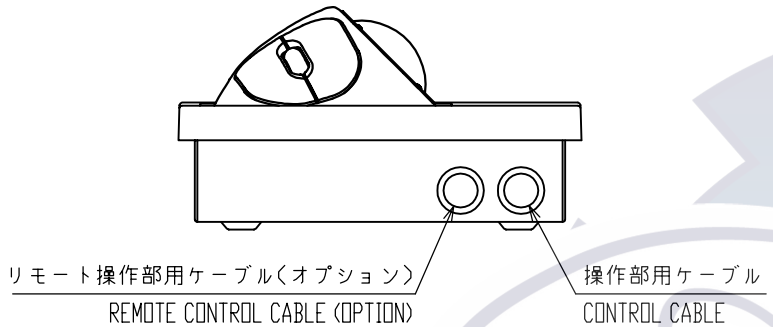

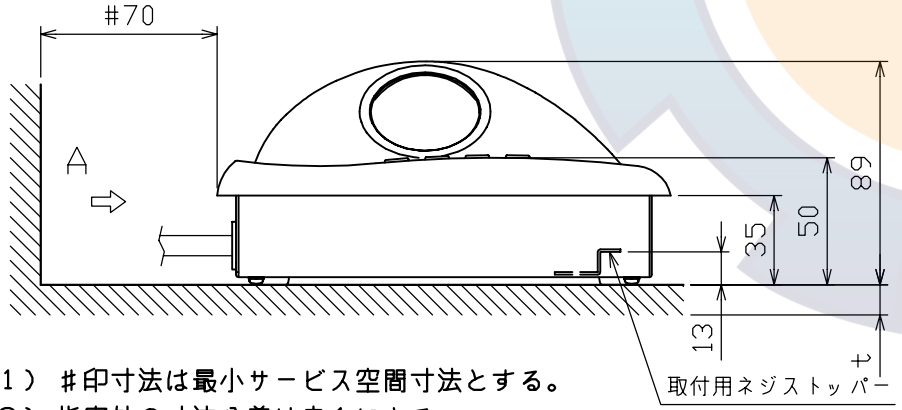

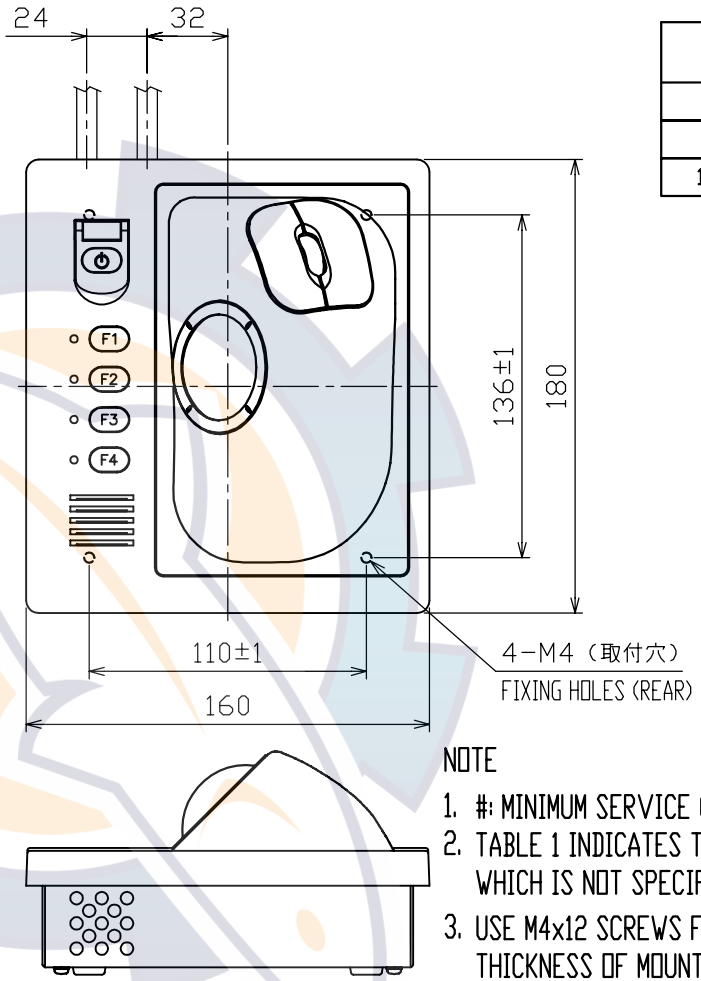

表１ TABLE 1

寸法区分（ｍｍ）DIMENSIONS	公差（ｍｍ）TOLERANCE
L≦50	±1.5
50<L≦100	±2.5
100<L≦500	±3

NOTE

1. #: MINIMUM SERVICE CLEARANCE.
2. TABLE 1 INDICATES TOLERANCE OF DIMENSIONS WHICH IS NOT SPECIFIED.
3. USE M4x12 SCREWS FOR FIXING. THICKNESS OF MOUNTING SURFACE SHOULD BE 2.5 CM. FOR GREATOR THICKNESS USE SCREW WHOSE LINGTH IS (M4X(t+7.8)) ±2.
4. MASS INCLUDES CABLE (10).

注　記　１）＃印寸法は最小サービス空間寸法とする。
２）指定外の寸法公差は表１による。
３）取付用ネジはセムスＢ（Ｍ４Ｘ１２）を使用のこと。
取付面板厚は最小２最大５とする。
それ以外はネジ長さ（Ｍ４Ｘ（ｔ＋７．８））±２
のセムスＢを使用のこと。
４）質量はケーブル（１０ｍ）を含む

DRAWN Jan. 7 '04 E. MIYOSHI			TITLE RCU-015
CHECKED Takahashi T.			名称 操作部（卓上装備）
APPROVED Y. Hatai		FAR-2117 SER.	外寸図
SCALE 1/3	MASS 2.4 ±10% kg	質量は10mケーブル重さを含む。 MASS W/ 10m CABLE	NAME CONTROL UNIT (DESKTOP MOUNT)
DWG.No. C3519-G13- B		03-163-785G-2	OUTLINE DRAWING

FURUNO ELECTRIC CO., LTD.

www.reelschematic.com

FURUNO

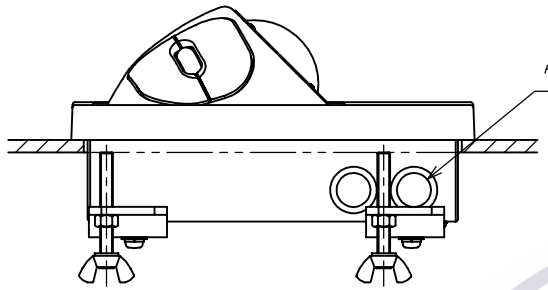

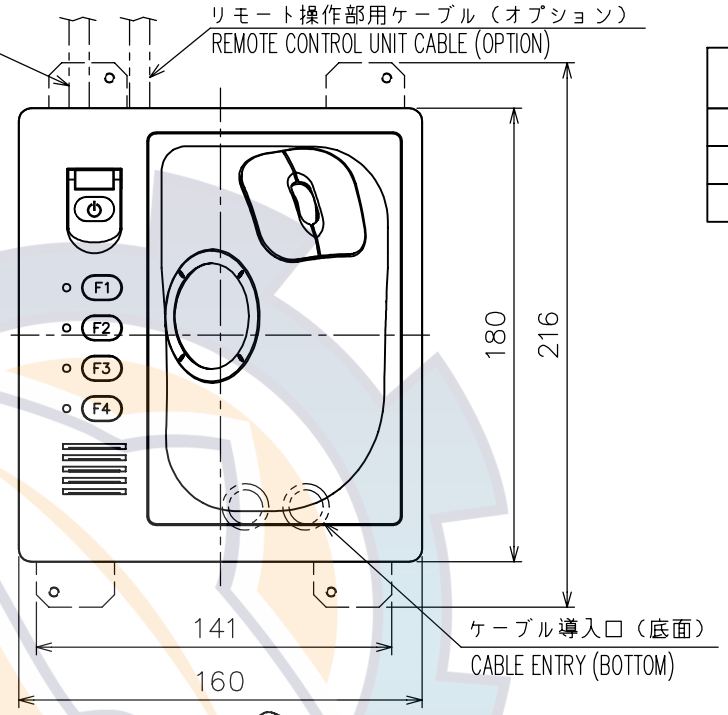

表1 TABLE 1

寸法区分（mm）DIMENSIONS	公差（mm）TOLERANCE
L≦50	±1.5
50<L≦100	±2.5
100<L≦500	±3

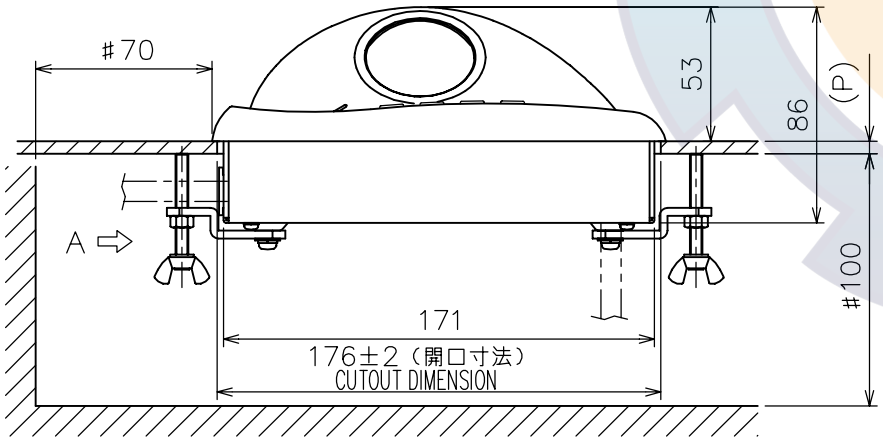

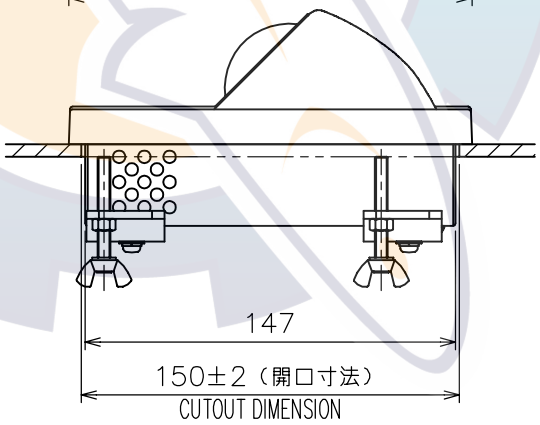

注　記

1）＃印寸法は最小サービス空間寸法とする。
2）指定外の寸法公差は表1による。
3）ケーブル導入口は側面・底面から選択のこと。
4）壁の厚さ（P）は最大10とする
5）質量はケーブル（10m）を含む

NOTE

1. #: MINIMUM SERVICE CLEARANCE.
2. TABLE 1 INDICATES TOLERANCE OF DIMENSIONS WHICH IS NOT SPECIFIED.
3. SELECT CABLE ENTRY FROM REAR OR SIDE.
4. THICKNESS (P) 10 MM MAX.
5. MASS INCLUDES CABLE (10M).

DRAWN Mar. 17 '04 E. MIYOSHI			TITLE RCU-015
CHECKED TAKAHASHI. T			名称 トラックボール操作部（埋込装備）
APPROVED Y. Hatai		FAR-2117 SER.	外寸図
SCALE 1/3	MASS 2.5 ±10% kg	質量は10mケーブル重さを含む。 MASS W/ 10m CABLE	NAME TRACKBALL CONTROL UNIT (FLUSH MOUNT)
DWG.No. C3519-G14- C		03-163-786G-2	OUTLINE DRAWING

FURUNO ELECTRIC CO., LTD.

www.reelschematic.com

FURUNO

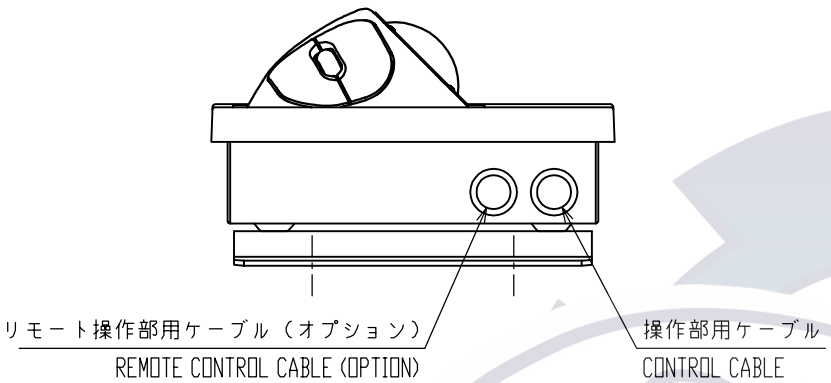

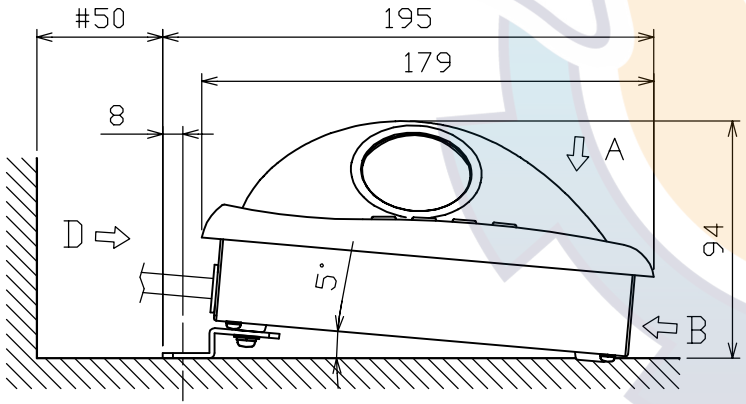

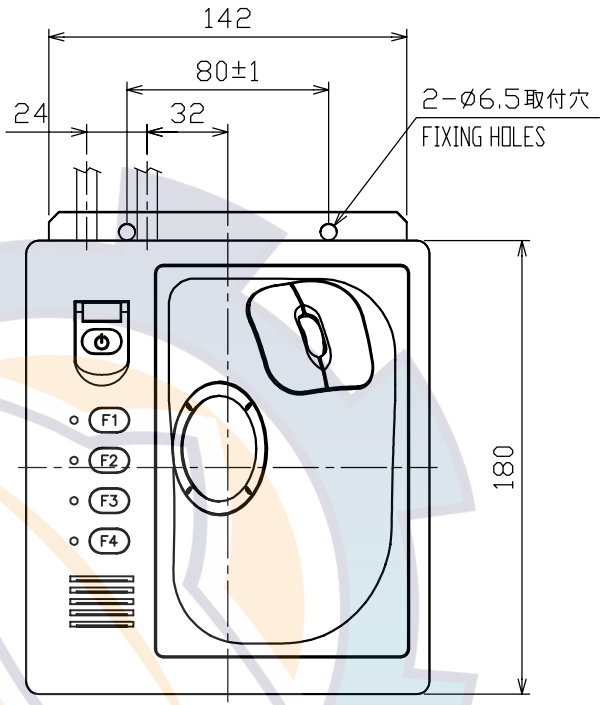

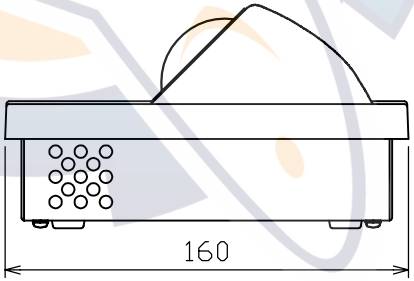

矢視B
VIEW B

表1 TABLE 1

寸法区分（mm） DIMENSIONS	公差（mm） TOLERANCE
L≦50	±1.5
50<L≦100	±2.5
100<L≦500	±3

注　記

1）＃印寸法は最小サービス空間寸法とする。
2）指定外の寸法公差は表1による。
3）取付にはトラスタッピンネジ呼び径6またはM6ボルトを使用のこと。
4）質量はケーブル（10m）を含む

NOTE

1. #: MINIMUM SERVICE CLEARANCE.
2. TABLE 1 INDICATES TOLERANCE OF DIMENSIONS WITCH IS NOT SPECIFIED.
3. USE TAPPING SCREWS φ6 OR M6 BOLTS FOR FIXING THE UNIT.
4. MASS IN CLUDES CABLE (10M).

DRAWN Jan. 7 '04 E. MIYOSHI		TITLE	RCU-015
CHECKED Takahashi T.		名称	操作部（取付金具装備）
APPROVED Y. Hatai	FAR-2117 SER.		外寸図
SCALE 1/3 MASS 2.5 ±10% kg	質量は10mケーブル重さを含む。 MASS W/ 10m CABLE	NAME	CONTROL UNIT (TABLETOP MOUNT W/ FIXTURE)
DWG.No. C3519-G15- B	03-163-787G-1		OUTLINE DRAWING

FURUNO ELECTRIC CO., LTD.

D-11

www.reelschematic.com

FURUNO

表１ TABLE 1

寸法区分（ｍｍ） DIMENSIONS	公差（ｍｍ） TOLERANCE
L≦50	±1.5
50<L≦100	±2.5
100<L≦500	±3

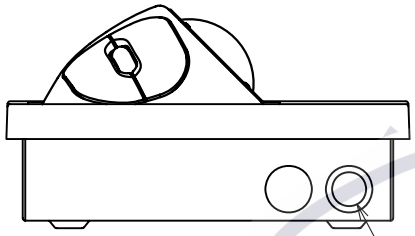

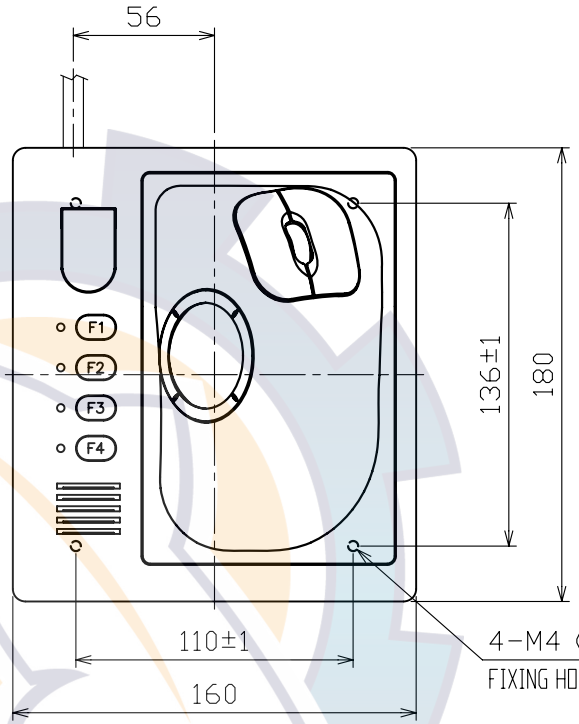

操作部用ケーブル
CONTROL CABLE

4−M4（取付穴）
FIXING HOLES (REAR)

矢視A
VIEW A

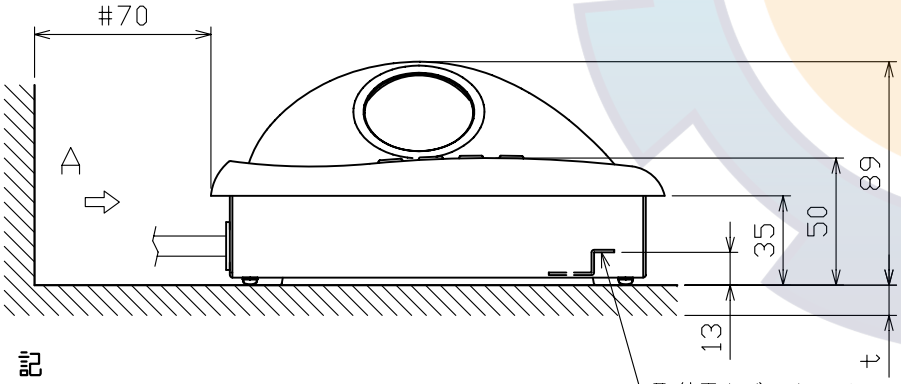

取付用ネジストッパー
FIXING SCREW STOPPER

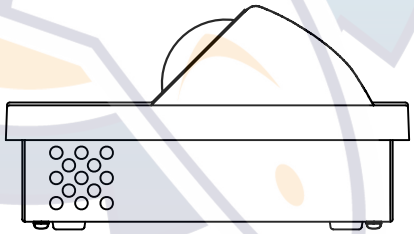

NOTE

1. #: MINIMUM SERVICE CLEARANCE.
2. TABLE 1 INDICATES TOLERANCE OF DIMENSIONS WHICH IS NOT SPECIFIED.
3. USE M4x12 SCREWS FOR FIXING. THICKNESS OF MOUNTING BOARD SHOULD BE 2≦t≦5. FOR USING GREATER THICKNESS, USE SCREW WHOSE LENGTH IS (t+7.8) ±2.

注　記

１）＃印寸法は最小サービス空間寸法とする。
２）指定外の寸法公差は表１による。
３）取付用ネジはセムスＢ（Ｍ４Ｘ１２）を使用のこと。
取付面板厚(t)は２≦t≦５とする。
それ以外はネジ長さ（ｔ＋７．８）±２
のセムスＢを使用のこと。

DRAWN Feb. 7 '07 E. MIYOSHI		TITLE	RCU-016
CHECKED TAKAHASHI. T		名称	操作部（卓上装備）
APPROVED Y. Hatai	FAR-2117 SER.		外寸図
SCALE 1/3 MASS 2.4 ±10% kg	質量は10mケーブル重さを含む。 MASS W/ 10m CABLE	NAME	CONTROL UNIT (DESKTOP MOUNT)
DWG.No. C3519-G16- C	03-163-780G-4		OUTLINE DRAWING

FURUNO ELECTRIC CO., LTD.

www.reelschematic.com

FURUNO

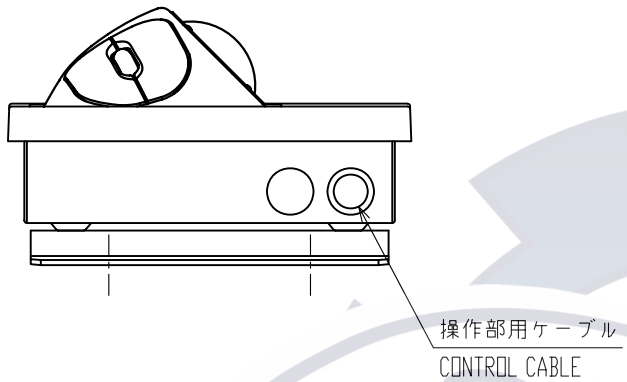

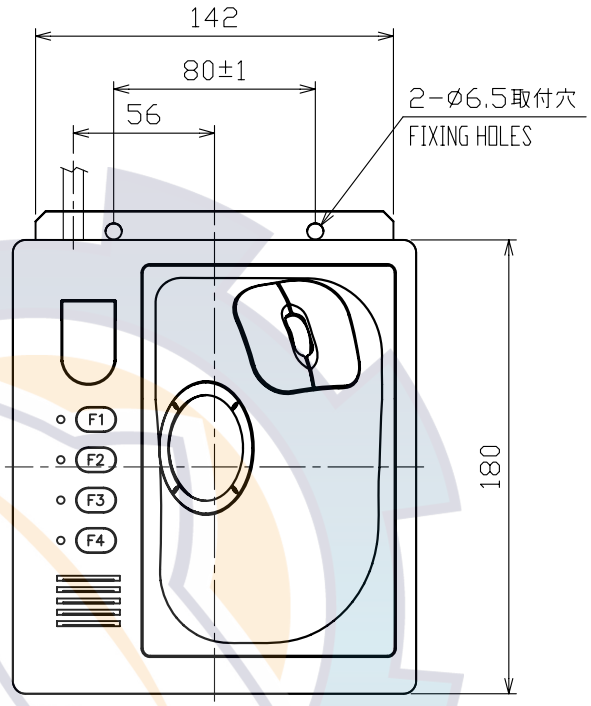

表 1 TABLE 1

寸法区分（mm） DIMENSIONS	公差（mm） TOLERANCE
L≦50	±1.5
50<L≦100	±2.5
100<L≦500	±3

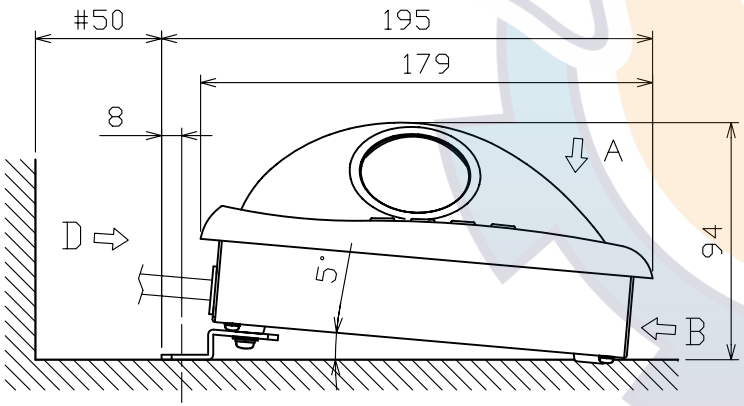

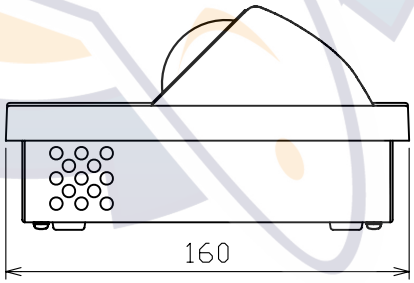

注　記

1）＃印寸法は最小サービス空間寸法とする。
2）指定外の寸法公差は表１による。
3）取付用ネジはトラスタッピンネジ呼び径６、またはＭ６ボルトを使用のこと。

NOTE

1. #: MINIMUM SERVICE CLEARANCE.
2. TABLE 1 INDICATES TOLERANCE OF DIMENSIONS. WHICH IS NOT SPECIFIED.
3. USE TAPPING SCREWS φ6 OR M6 BOLTS FOR FIXING THE UNIT.

DRAWN Feb. 6 '07 E. MIYOSHI			TITLE RCU-016
CHECKED TAKAHASHI. T			名称 操作部（取付金具装備）
APPROVED Y. Hatai		FAR-2117 SER.	外寸図
SCALE 1/3	MASS 2.5 ±10% kg	質量は10mケーブル重さを含む。 MASS W/ 10m CABLE	NAME CONTROL UNIT (TABLETOP MOUNT W/ FIXTURE)
DWG.No. C3519-G12- C		03-163-782G-2	OUTLINE DRAWING

FURUNO ELECTRIC CO., LTD.

www.reelschematic.com

FURUNO

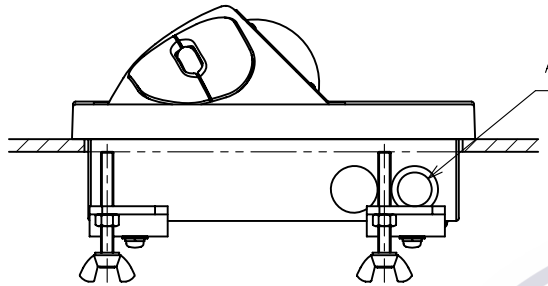

矢視A
VIEW A

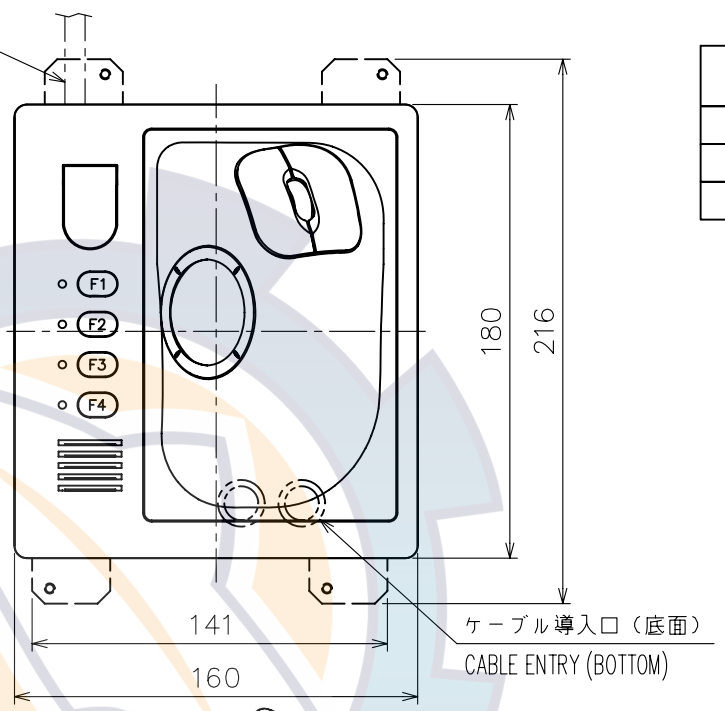

表1 TABLE 1

寸法区分（mm）DIMENSIONS	公差（mm）TOLERANCE
L≦50	±1.5
50<L≦100	±2.5
100<L≦500	±3

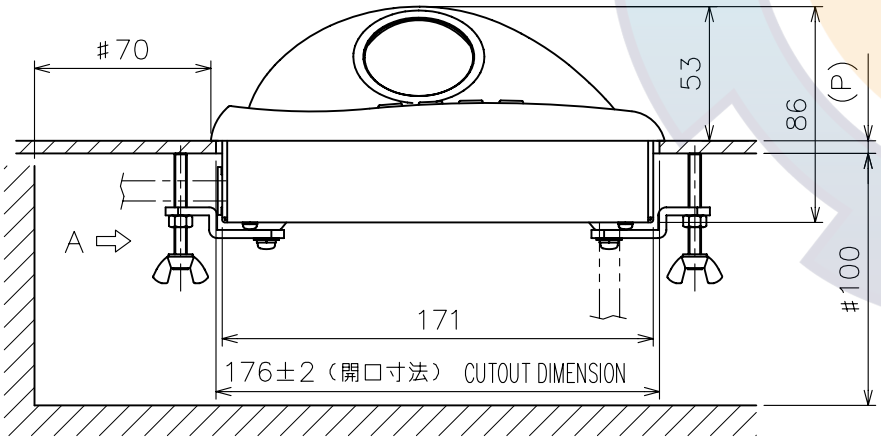

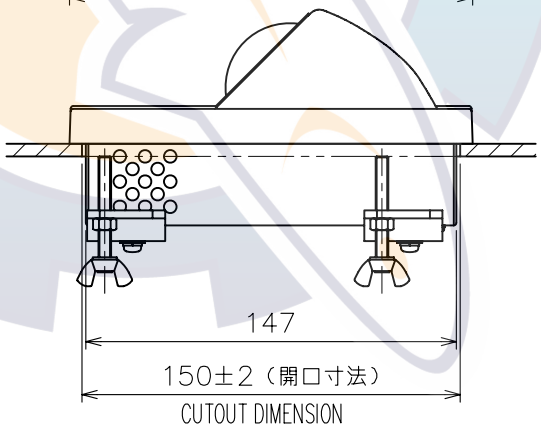

注　記

1）＃印寸法は最小サービス空間寸法とする。
2）指定外の寸法公差は表1による。
3）ケーブル導入口は側面・底面から選択のこと。
4）壁の厚さ（P）は最大10とする

NOTE

1. #: MINIMUM SERVICE CLEARANCE.
2. TABLE 1 INDICATES TOLERANCE OF DIMENSIONS WHICH IS NOT SPECIFIED.
3. SELECT CABLE ENTRY FROM REAR OR SIDE.
4. THICKNESS (P): 10 mm MAX.

DRAWN Feb. 6 '07 E. MIYOSHI		TITLE	RCU-016
CHECKED TAKAHASHI. T		名称	操作部（埋込装備）
APPROVED Y. Hatai	FAR-2117 SER.		外寸図
SCALE 1/3 MASS 2.5 ±10% kg	質量は10mケーブル重さを含む。 MASS W/ 10m CABLE	NAME	CONTROL UNIT (FLUSH MOUNT)
DWG.No. C3519-G11- D	03-163-781G-4		OUTLINE DRAWING

FURUNO ELECTRIC CO., LTD.

www.reelschematic.com

FURUNO

表 1 TABLE 1

寸法区分（mm） DIMENSIONS	公差（mm） TOLERANCE
L≦50	±1.5
50<L≦100	±2.5
100<L≦500	±3

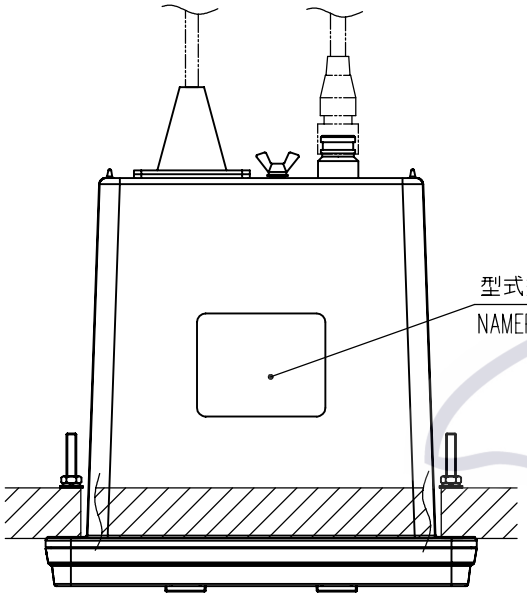

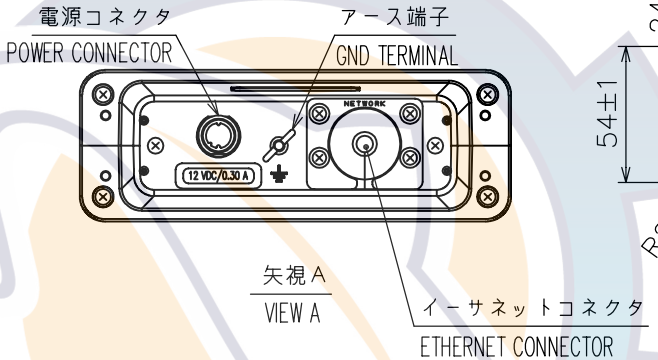

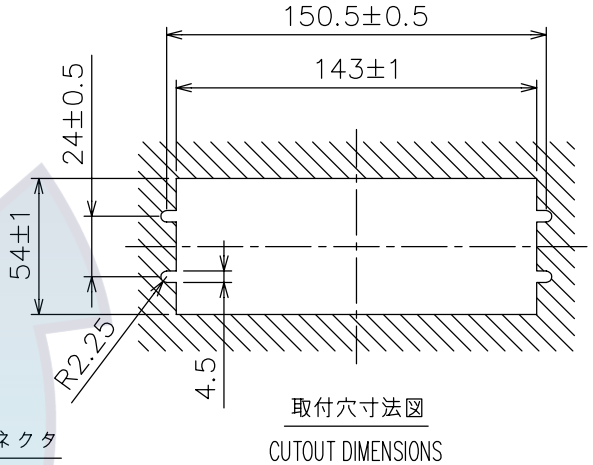

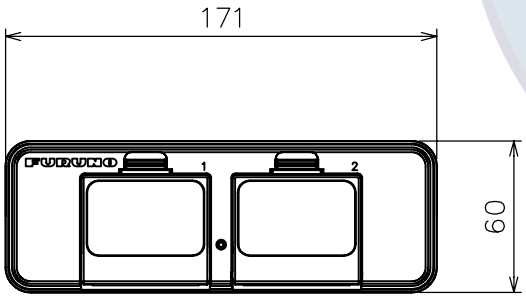

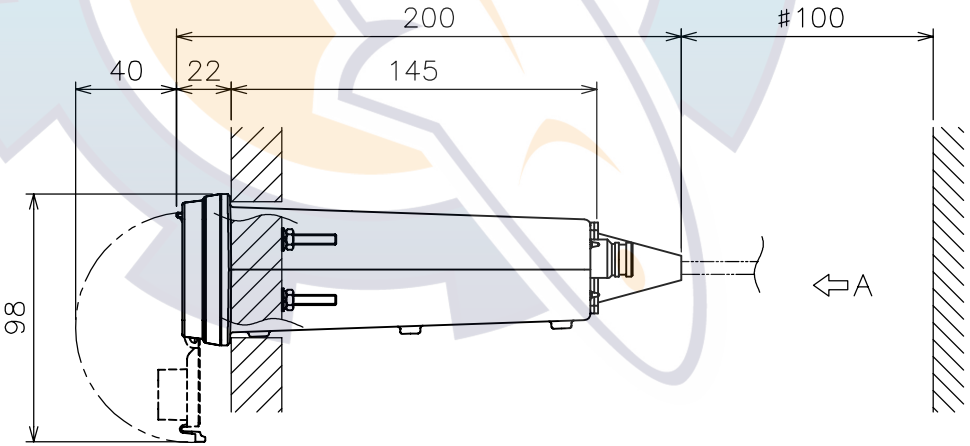

注　記　1）取付はＭ４Ｘ５０寸切りボルト、Ｍ４平座金、
　　Ｍ４バネ座金、Ｍ４ナット使用のこと。
　　２）＃印寸法は最小サービス空間寸法とする。
　　３）指定外の寸法公差は表１による。

NOTE 1. USE M4X50 BOLTS, M4 FLAT WASHERS,
M4 SPRING WASHERG AND M4 NUTS FOR FIXING.
2. #: MINIMUM SERVICE CLEARANCE.
3. TABLE 1 INDICATES TOLERANCE OF DIMENSIONS WHICH IS NOT SPECIFIED.

DRAWN Mar. 29 '04 E. MIYOSHI	FAR-2117 SERIES	TITLE	CU-200
CHECKED TAKAHASHI. T	MODEL 1833C	名称	防水型カードインターフェイス(埋込装備)
APPROVED Y. Hatai	MODEL 1833C-BB		外寸図
SCALE 1/3 MASS 0.8 ±10% kg		NAME	MEMORY CARD INTERFACE UNIT (FLUSH MOUNT)
DWG.No. C3532-G04- B	19-023-300G-1		OUTLINE DRAWING

FURUNO ELECTRIC CO., LTD.

www.reelschematic.com

FURUNO

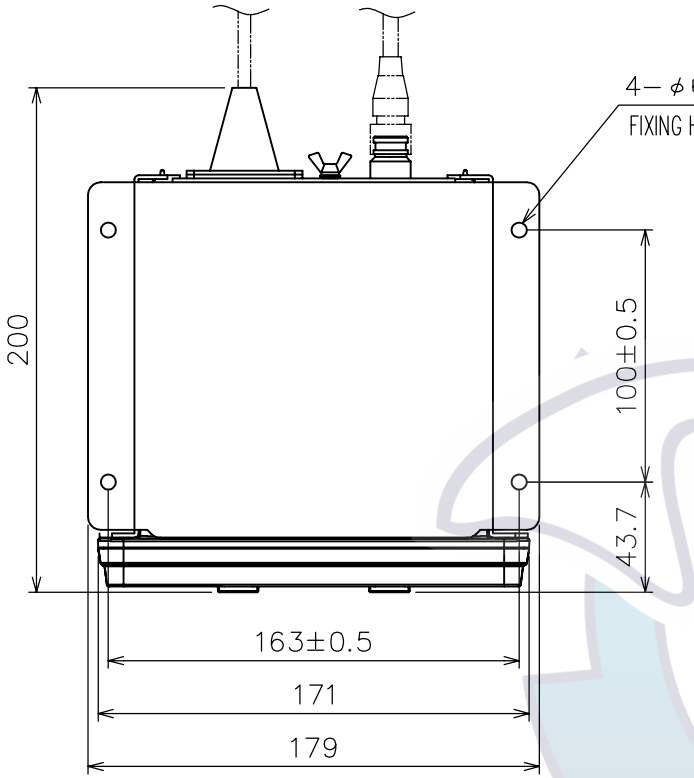

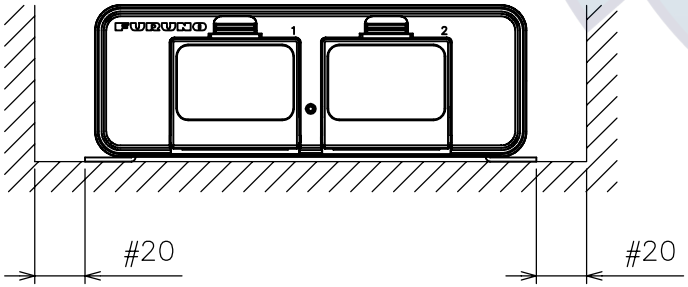

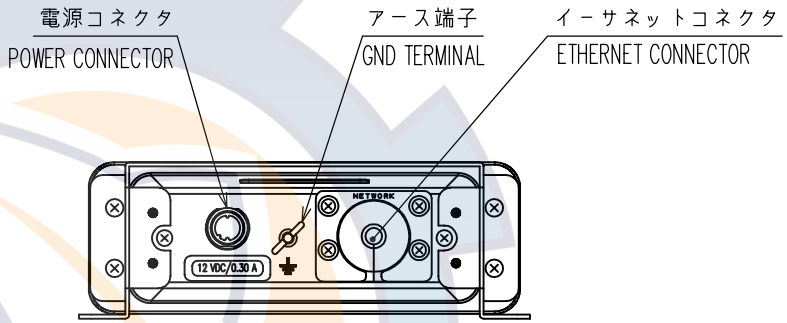

矢視A
VIEW A

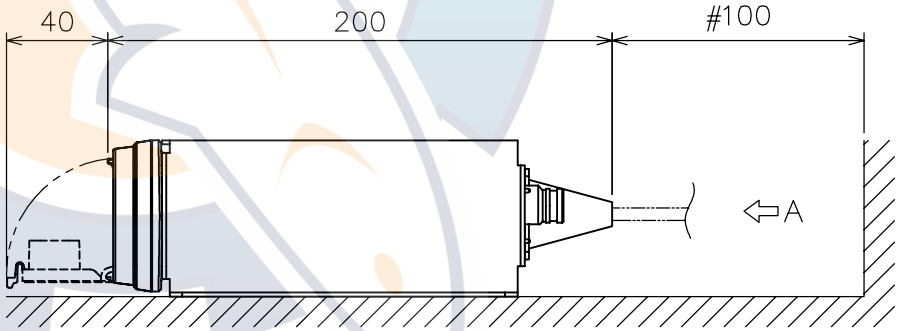

表 1 TABLE 1

寸法区分（mm） DIMENSIONS	公差（mm） TOLERANCE
L≦50	±1.5
50<L≦100	±2.5
100<L≦500	±3

注　記　1）　#印寸法は最小サービス空間寸法とする。
2）　指定外の寸法公差は表１による。
3）　取付用ネジは＋トラスタッピンネジ呼び径５×２０を使用のこと。

NOTE　1.　#: MINIMUM SERVICE CLEARANCE.
2.　TABLE 1 INDICATES TOLERANCE OF DIMENSIONS WHICH IS NOT SPECIFIED.
3.　USE SELF-TAPPING SCREWS 5X20 FOR FIXING THE UNIT.

DRAWN Mar. 29.'04 E. MIYOSHI	FAR-2117 SERIES		TITLE CU-200
CHECKED TAKAHASHI. T	MODEL 1833C		名称 防水型カードインターフェイス(卓上装備)
APPROVED Y. Hatai	MODEL 1833C-BB		外寸図
SCALE 1/3 MASS 1.3 ±10% kg			NAME MEMORY CARD INTERFACE UNIT (TABLETOP MOUNT)
DWG.No. C3532-G05- B	19-023-310G-1		OUTLINE DRAWING

FURUNO ELECTRIC CO., LTD.

www.reelschematic.com

FURUNO

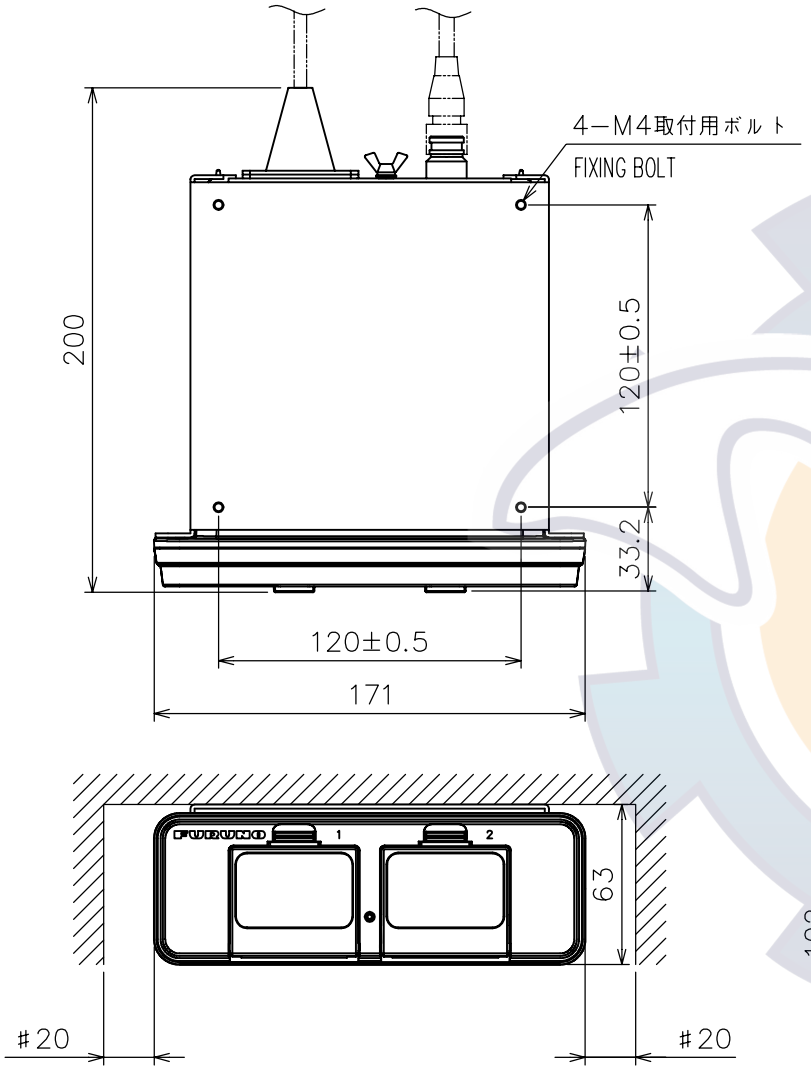

注　記

1）　#印寸法は最小サービス空間寸法とする。
2）　指定外の寸法公差は表１による。
3）　取付用ナットはＭ４ナットを使用のこと。
4）　取付板厚は最大８ｍｍとする。

NOTE

1. #: MINIMUM SERVICE CLEARANCE.
2. TABLE 1 INDICATES TOLERANCE OF DIMENSIONS WHICH IS NOT SPECIFIED.
3. USE NUT M4 FOR FIXING THE UNIT.
4. MAX. MOUNTING BASE THICKNESS IS 8 MM.

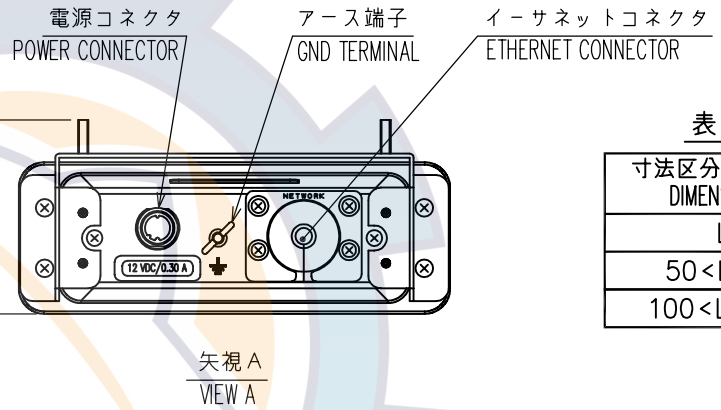

表 1 TABLE 1

寸法区分（mm） DIMENSIONS	公差（mm） TOLERANCE
L≦50	±1.5
50<L≦100	±2.5
100<L≦500	±3

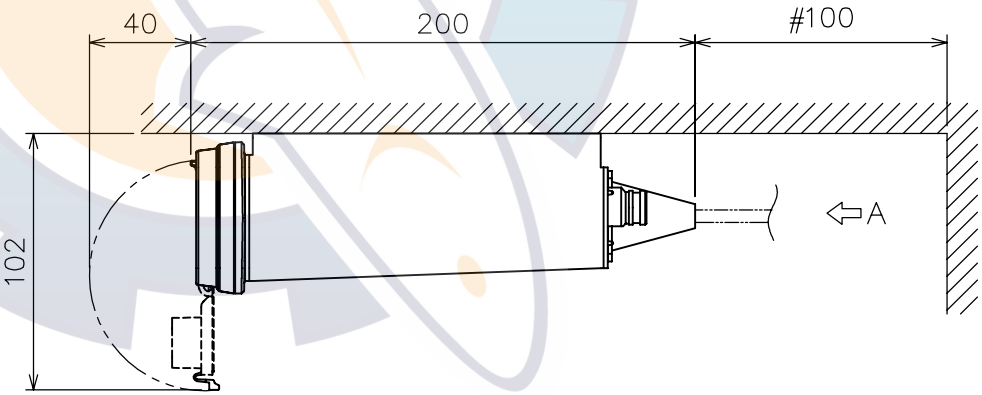

DRAWN Mar. 29.'04 F. MIYOSHI	FAR-2117 SERIES	TITLE	CU-200
CHECKED TAKAHASHI. T	MODEL 1833C	名称	防水型カードインターフェイス(天井装備)
APPROVED Y. Hatai	MODEL 1833C-BB		外寸図
SCALE 1/3 MASS 1.3 ±10% kg		NAME	MEMORY CARD INTERFACE UNIT (OVERHEAD MOUNT)
DWG.No. C3532-G06- B	19-023-320G-1		OUTLINE DRAWING

FURUNO ELECTRIC CO., LTD.

D-17

www.reelschematic.com

FURUNO

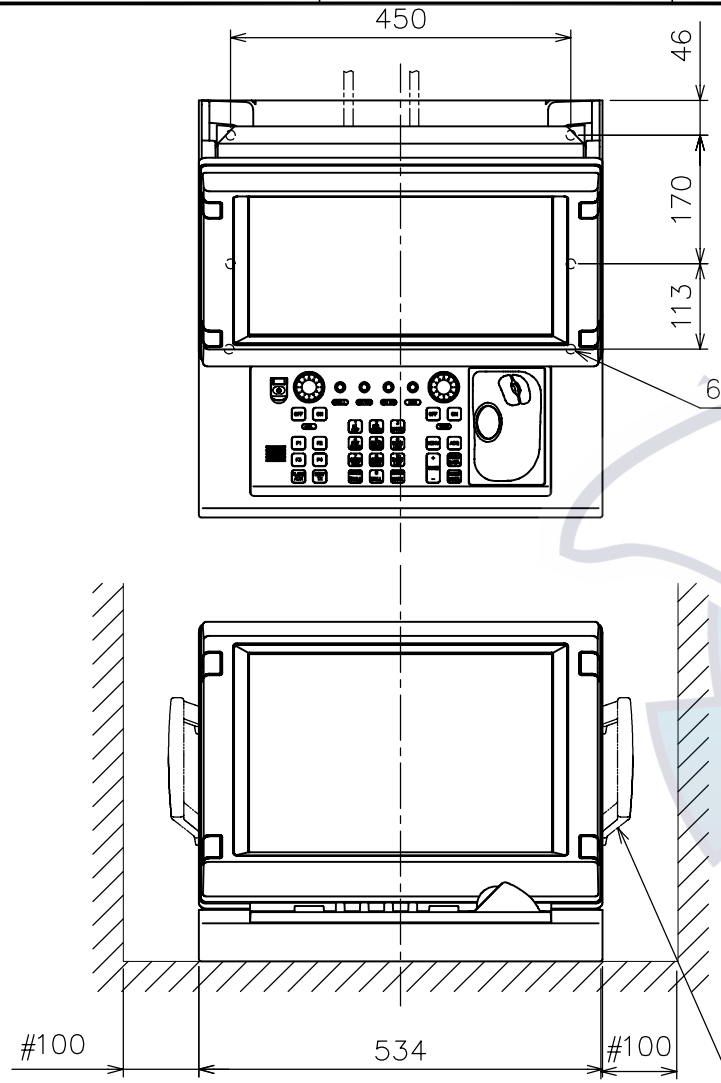

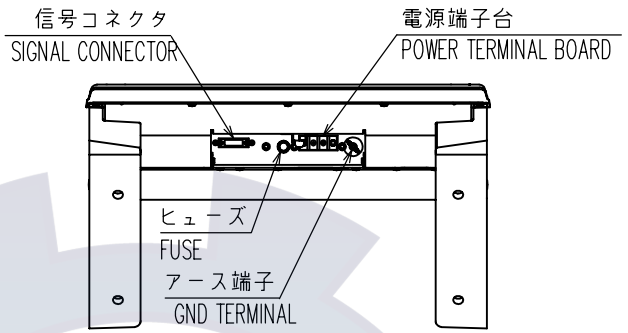

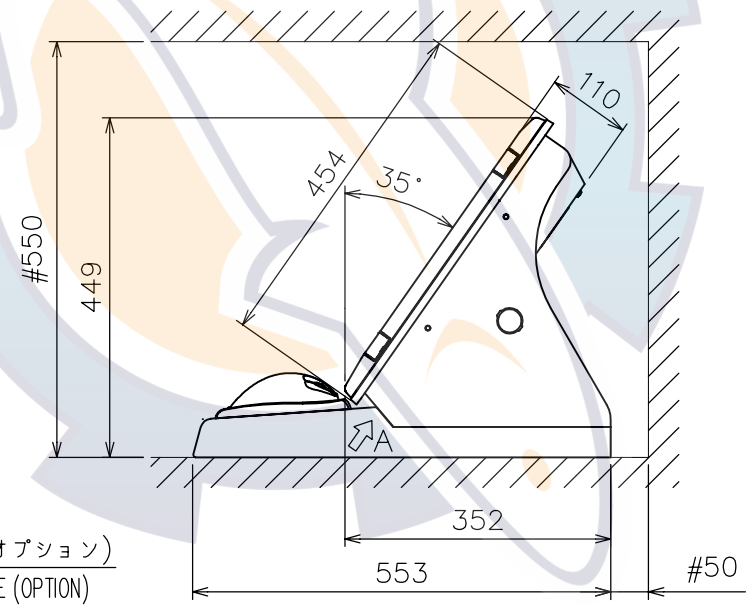

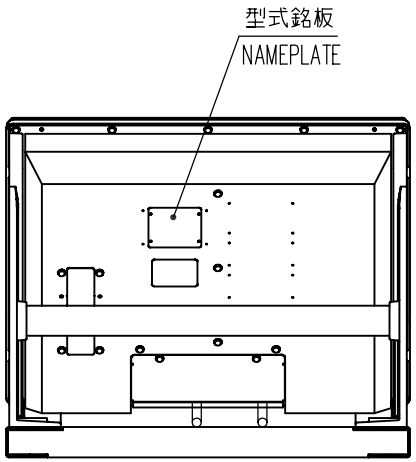

表 1 TABLE 1

寸法区分（mm）DIMENSIONS (mm)	公差（mm）TOLERANCE (mm)
L≦50	±1.5
50<L≦100	±2.5
100<L≦500	±3
500<L≦1000	±4

注　記　1）　#印寸法は最小サービス空間寸法とする。
　　2）　指定外の寸法公差は表1による。
　　3）　取付用ネジはM10ボルト、またはコーチボルト呼び径9を使用のこと。
　　4）　質量は操作部ケーブル（10m）を含む。

NOTE
1. #: MINIMUM SERVICE CLEARANCE.
2. TABLE 1 INDICATES TOLERANCE OF DIMENSIONS WHICH IS NOT SPECIFIED.
3. USE M10 BOLTS OR COACH SCREWS ø9 FOR FIXING THE UNIT.
4. MASS INCLUDES CONTROL CABLE (10m).

DRAWN Mar. 18 '04 E. MIYOSHI			TITLE MU-201CR w/ RCU-014
CHECKED TAKAHASHI. T			名称 指示部（連結台タイプ）
APPROVED Y. Hatai	FAR-2107		外寸図
SCALE 1/10 MASS 27 ±10% kg			NAME DISPLAY UNIT (COMBINATION TYPE)
DWG No. C3519-G27-A	03-163-760G-2		OUTLINE DRAWING

FURUNO ELECTRIC CO., LTD.

www.reelschematic.com

FURUNO

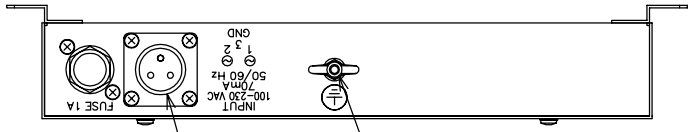

表１　TABLE 1

寸法区分（ｍｍ）DIMENSIONS	公差（ｍｍ）TOLERANCE
Ｌ≦５０	±１．５
５０＜Ｌ≦１００	±２．５
１００＜Ｌ≦５００	±３

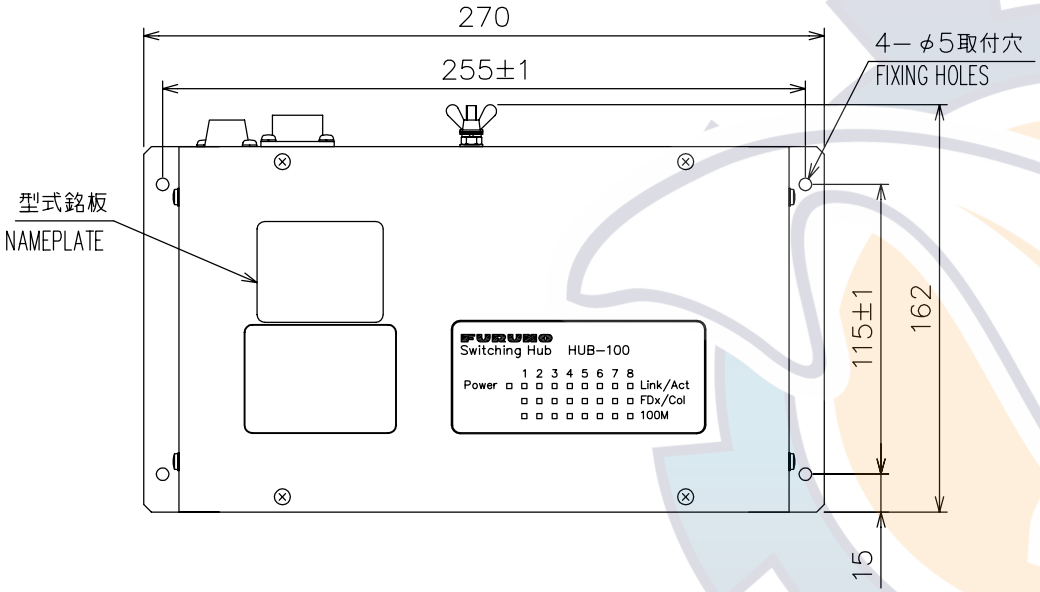

注　記

１）　取付用ネジはトラスタッピングネジ呼び径４×１６を使用のこと

２）　指定外寸法公差は表１による

３）　＃印寸法は最小サービス空間寸法とする

NOTE

1. USE TAPPING SCREWS 4x16 FOR FIXING THE UNIT.
2. TABLE 1 INDICATES TOLERANCE OF DIMENSIONS WHICH IS NOT SPECIFIED.
3. #: MINIMUM SERVICE CLEARANCE.

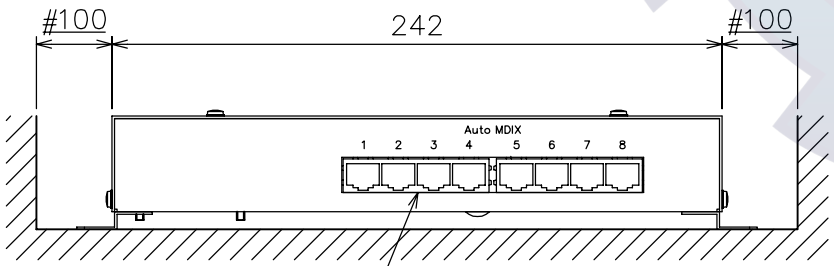

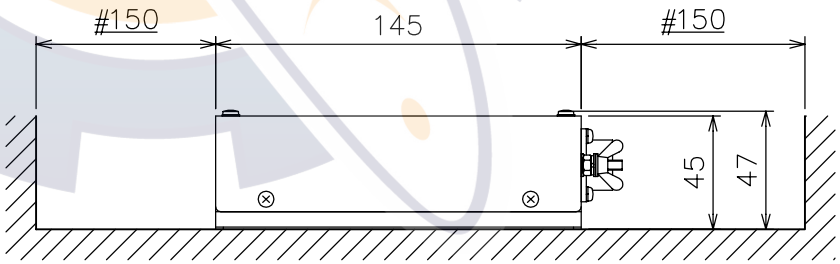

DRAWN Mar. 31 '04 T.YAMASAKI			TITLE HUB-100
CHECKED Mar. 31 '04 T.MATSUGUCHI			名称 イーサネットスイッチングハブ
APPROVED Apr.05'04 T. Matsuguchi			外寸図
SCALE 1/3	MASS 1.5 ±10% kg		NAME SWITCHING HUB
DWG.No. C3519-G18- B		03-163-960G-2	OUTLINE DRAWING

FURUNO ELECTRIC CO., LTD.

www.reelschematic.com

www.reelschematic.com

FURUNO

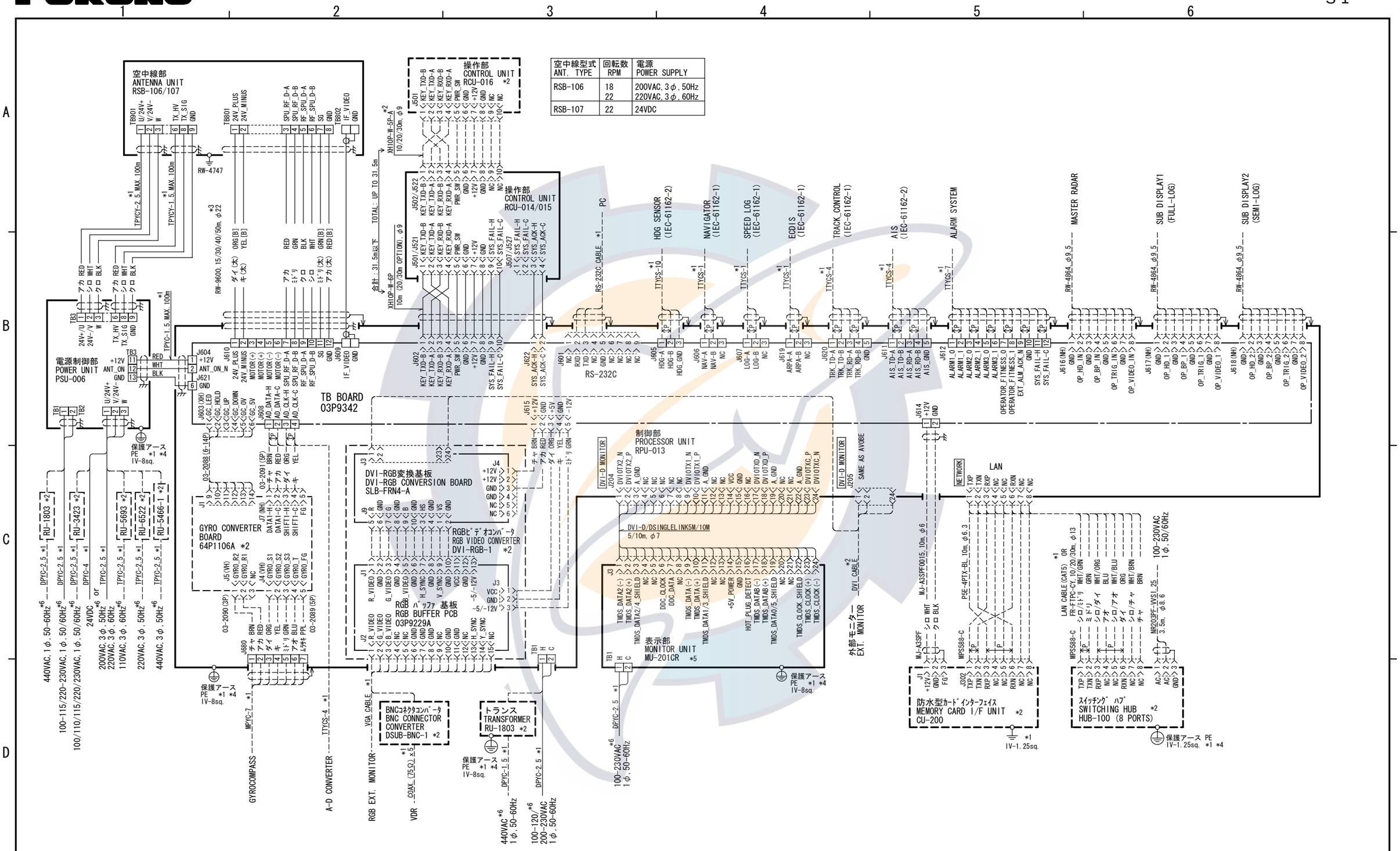

空中線型式 ANT. TYPE	回転数 RPM	電源 POWER SUPPLY
RSB-106	18 22	200VAC, 3φ, 50Hz 220VAC, 3φ, 60Hz
RSB-107	22	24VDC

注記
＊1）造船所手配。
＊2）オプション。
＊3）最長 100m（延長するときは接続箱RJB-001が必要 ）。
＊4）保護アース用ケーブルは緑／黄の絶縁線を使用のこと。
＊5）FAR-2157-BBのときは支給なし。
＊6）交流は両極切りブレーカ(造船所手配)を経由すること。

NOTES
*1: SHIPYARD SUPPLY.
*2: OPTION.
*3: MAX. 100m. (JUNCTION BOX RJB-001 IS REQUIRED FOR EXTENSION)
*4: USE GRN/YEL VINYL INSULATION WIRE FOR PROTECTIVE EARTH.
*5: NOT SUPPLIED FOR FAR-2157-BB.
*6: PASS THE AC LINE THROUGH A DOUBLE-CONTACT BREAKER (SHIPYARD SUPPLY).

DRAWN	Feb. 1 '07 Maki	TYPE	FAR-2157/2157-BB
CHECKED	TAKAHASHI.T	名 称	船舶用レーダー/ARPA
APPROVED	Y.Hatai		相互結線図
SCALE	MASS kg	NAME	MARINE RADAR/ARPA
DWG.No.	C3522-C01- C		INTERCONNECTION DIAGRAM

FURUNO ELECTRIC CO., LTD.